FOLDING STAIRWAY

Manual for Komatsu WA 1200

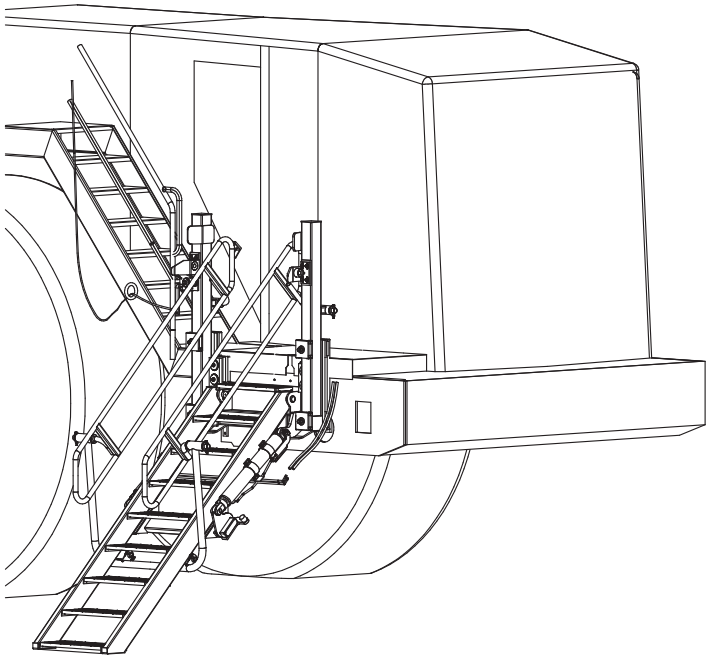

Model No.:PSA-WA1200-FS
Serial No.:WA1200-FS-001C
Date Manufactured:

FOLDING STAIRWAY
Komatsu WA1200 Loader

CONTENTS

Page 3 Section 1 Installation and Mounting Instructions
Installation Drawings

8 Section 2 Recommended Maintenance procedure

9 Section 3 Operating Procedure

Section 4 Drawings and Repair Parts lists

10 4 Assembly Complete
Parts List

12 4-1 Base Frame and Mounting Assembly
Parts List

14 4-2 Stair Assembly
Parts List

16 4-3 Latch Assembly
Parts List

18 4-4 Hydraulic Cylinder
Parts List
Valve Diagram

21 4-5 Power Pack
Parts List

25 4-6 Electrical Controls
Parts Lists
Wiring Diagrams

FOLDING STAIRWAY
Komatsu WA1200 Loader

Section 1 Installation and Mounting Instructions

NOTE
Follow all on-site/Mine lifting and safety procedures when installing PSFS to Loader

As per Drawing PSA-WA1200-CW : Sheet 1 of 3 Page 4

Stair Mounting Pads Installation Procedure

1. Bolt on pads (CO2 + CO3) with the template (CO4) plate supplied. If they are not already done from factory. You may have to add extra washers as the bolts could be too long. VIEW X

2. Clean the paint where the weld will be applied, to avoid contamination.

3. Position the assembled template with pads in a way so that the pads faces sit with no clearance to the skin of the machine CW. The top lip of the template should sit on the top face of the OEM landing. VIEW Z

4. Check dimension is 305mm to the edge of the CW body as shown in VIEW Z. Tack weld pads to skin of CW.

5. Unbolt and remove template. Weld pads with an 8mm fillet all around. Follow welding procedure for cold weather.

As per Drawing PSA-WA1200-CW : Sheet 2 of 3 Page 5

Stair To Mounting Pads Installation Procedure

1. Fit base mounting plate (A01) against mounting pads and bolt firmly with the 8 Bolts M20x60 supplied.

2. Lift stair (in lowered position) and align 4 threaded bars and push firmly against base mounting plate. Insert washers and nuts to the threaded bar and tighten nuts firmly. Assure the rubber isolators are in place on the stair and fit the bolt supplied to fix them.

3. Fit extension steps as required to reach the minimum standard height from the ground.

FOLDING STAIRWAY
Komatsu WA1200 Loader

Section 1 **Installation Instructions - Drawing** **PSA- WA1200-CW** Sheet. 1

Stair Mounting Pads See Procedure Pg. 3

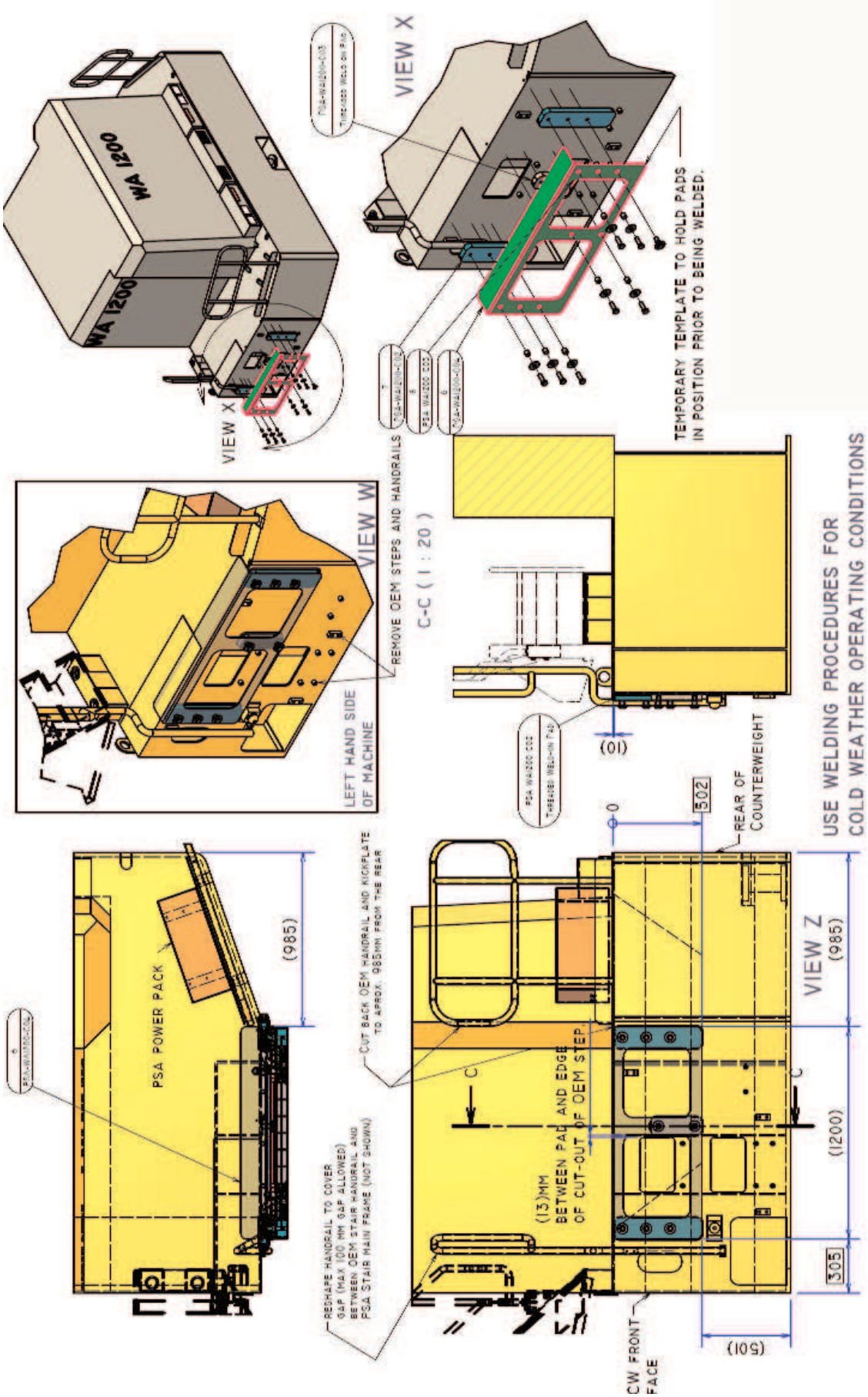

FOLDING STAIRWAY
Komatsu WA1200 Loader

Section 1 **Installation Instructions Drawing** **PSA- WA1200-CW** Sheet. 2

Stair Mounting Pads See Procedure Pg. 3

Floor and Handrails

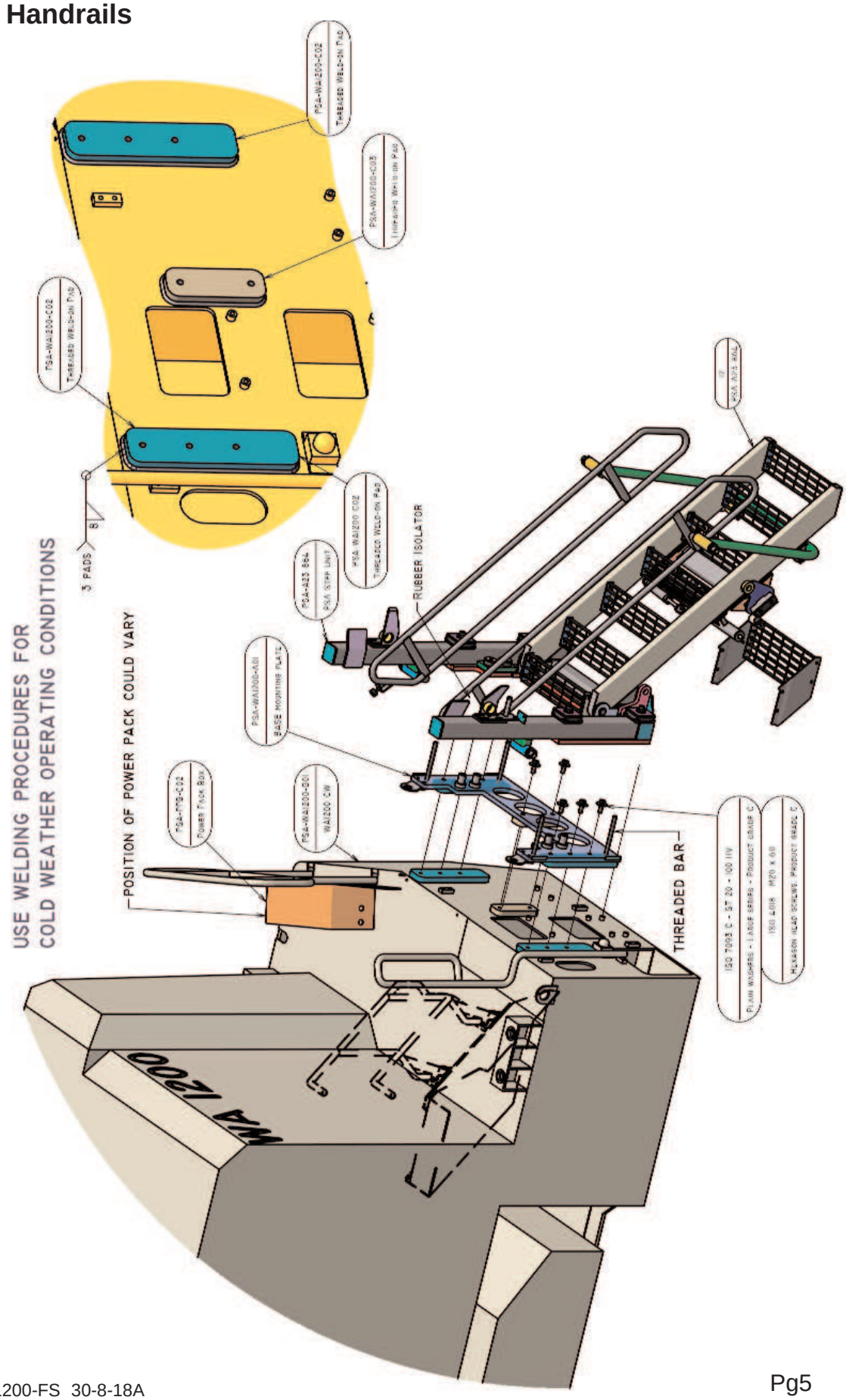

FOLDING STAIRWAY
Komatsu WA1200 Loader

Section 1 **Installation Instructions - Drawing** **PSA- WA1200-CW** Sheet. 3

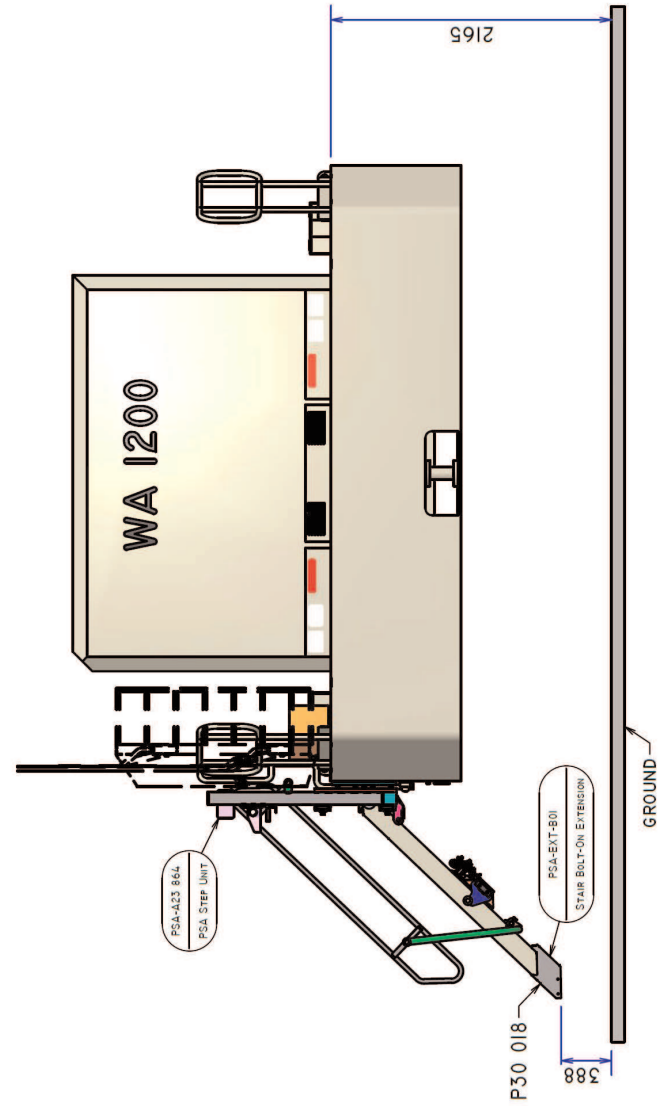

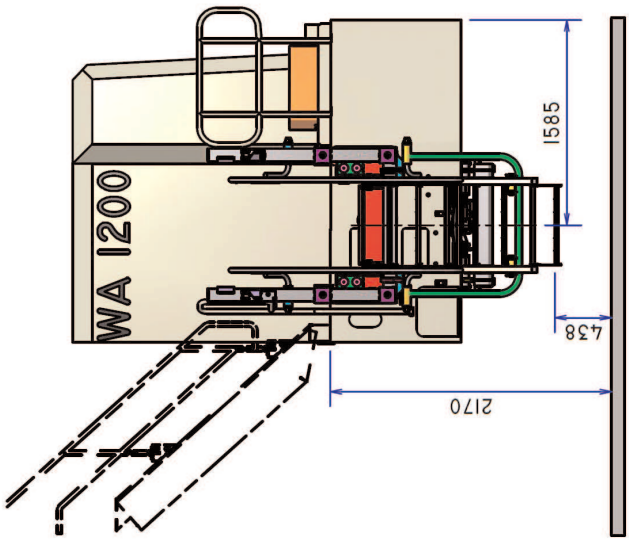

WARNING

Raising the POWER STEP platform by external means can create a vacuum in the hydraulic cylinder and create the opportunity to allow air into the hydraulic system, defeating the inherent safety features of the POWER STEP.
This must be avoided, to maintain safe operation of the POWER STEP.

In instances where the use of external means to raise the platform must be used, please follow the following instructions:

Loosen hard plumbed hydraulic lines on cylinder side of lock valve on cylinder.
Raise platform by available means.
Note: Make necessary arrangements to collect displaced oil, and be aware that air enters the piston side of the cylinder as platform is raised.
Lock in raised position.
Re-tighten hydraulic fittings.
SECURE THE PLATFORM IN THE RAISED POSITION, MECHANICALLY, CHAIN & TAGOUT THE POWER STEP

To recommission the POWER STEP:

Loosen hydraulic fittings on cylinder side of lock valve.
Note: Collect displaced oil.
Lower platform to lowest position, using alternate safety approved means, fully retracting cylinder. Ensure all personnel are clear of step radius.
Operate electrical control switch to purge air from the hydraulic line systems, lock valve and cylinder.
Tighten the hydraulic fittings either side of lock valves to restriction fittings.
Cycle step unloaded several times to purge all air from hydraulic system.
The Power Step will not operate correctly if there is any air in the hydraulic circuit (due to the incorrect operation of the lock valve).

Section 2 Recommended Maintenance Procedure

Daily

Visually check stairway and structure for damage, loose components, handrails, etc.

Check for hydraulic oil leaks from hydraulic cylinders, plumbing and hoses.

Notify the appropriate supervisor for any observed damage or malfunction.

500 Hours

Grease 2 grease nipples on hinge pins
Check main mounting bolts for torque.

Check hydraulic oil level in power pack and top up as necessary. (Stairway in raised position).

Top up using same hydraulic oil as used in hydraulics of machine.
Thoroughly check all electrical wiring for damage, replace as necessary.

Repeat daily check as above

5000 Hours

Change hydraulic oil in tank of hydraulic power pack (5.0 litres)

It is recommended that the same hydraulic oil be used in the power pack as the hydraulics of the machine.

Check and inspect all main bolts on stairway system.
Retorque if required.

Repeat daily check as above

Section 3 Operating Procedure

To Lower Stairway (from the machine)

Position machine in a level, safe area, away from the work face, whenever possible.
Apply park brake and lower engine speed to idle.
Check that the area below the Ladder Access System is clear of people and obstacles, and lower ladder by operating the two position electrical switch adjacent to the ladder, to the down position by pressing the switch down.
Hold the switch in the down position until ladder is fully lowered.
If the truck is parked on uneven ground, the bottom of the stairway may touch the ground before the ladder is in the fully lowered position.
Should this occur, descend the ladder with caution.

To Raise Stairway

Ascend the ladder onto the landing of the Loader.
Ensure the area around the ladder is clear of people and standing to the side, clear of the area the handrails and ladder raises into, operate the electrical switch to the raise position (up).
Hold the switch in the up position until the ladder is in the fully raised position.
The ladder is now raised and stored.

OPERATING NOTES

NOTE: FLOW CONTROL VALVE ADJUSTMENT:
The valve should be positioned to restrict the flow and speed of the Power Step when lowering. Adjust the knob on top of the valve by turning left or right (clockwise) when the step is being lowered, until it is lowering at a safe and reasonable speed.

When it is adjusted, lock the adjusting knob by tightening the grub screw located on the side of the knob.

NOTE: MAGNETIC 'GO' SWITCH ADJUSTMENT:
The switch target trigger area is located on the opposite side and end from the cable entry point on the switch. Once it is mounted to the switch bracket, adjust the switch in or out from the stair steel trigger point, to be within 3mm - 10mm from touching each other when the stair is in the desired rest position.
[DO NOT EXCEED 10MM DISTANCE BETWEEN THE SWITCH AND STRIKER PLATE].
Test by raising and lowering the Power Step a couple of times and adjust again if necessary.

FOLDING STAIRWAY
Komatsu WA1200 Loader

Section 4 **Assembly Complete** **PSA-WA1200-FS**

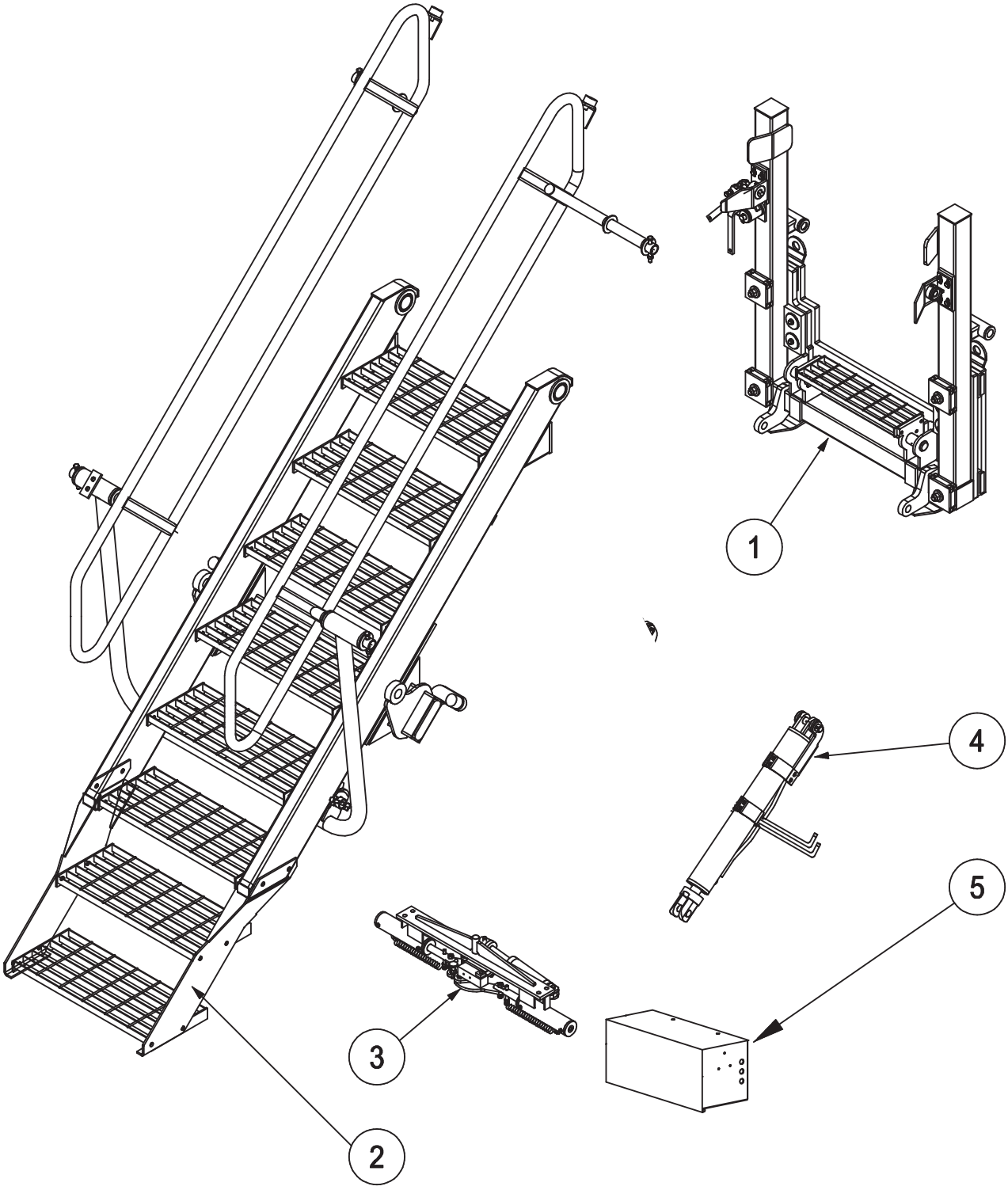

FOLDING STAIRWAY
Komatsu WA1200 Loader

Section 4 Assembly Complete PSA-WA1200-FS

See Drawing Page 10

ITEM	PART NO.	PART NAME	QTY		
	PSA-WA1200-FS	ASSEMBLY COMPLETE	1		
1	PS-23838-A	STAIR BASE FRAME	1		
2	PS-23851-A	STAIR ASSEMBLY	1		
3	PS-23847-A	LATCH ASSEMBLY	1		
4	PS-62996-A	HYDRAULIC CYLINDERS (Stair)	1		
5	PS-80103A-SLD	POWER PACK	1		

FOLDING STAIRWAY
Komatsu WA1200 Loader

Section 4.1 Base Frame and Mounting Assembly PS-23838-A

See Parts List Pg. 13

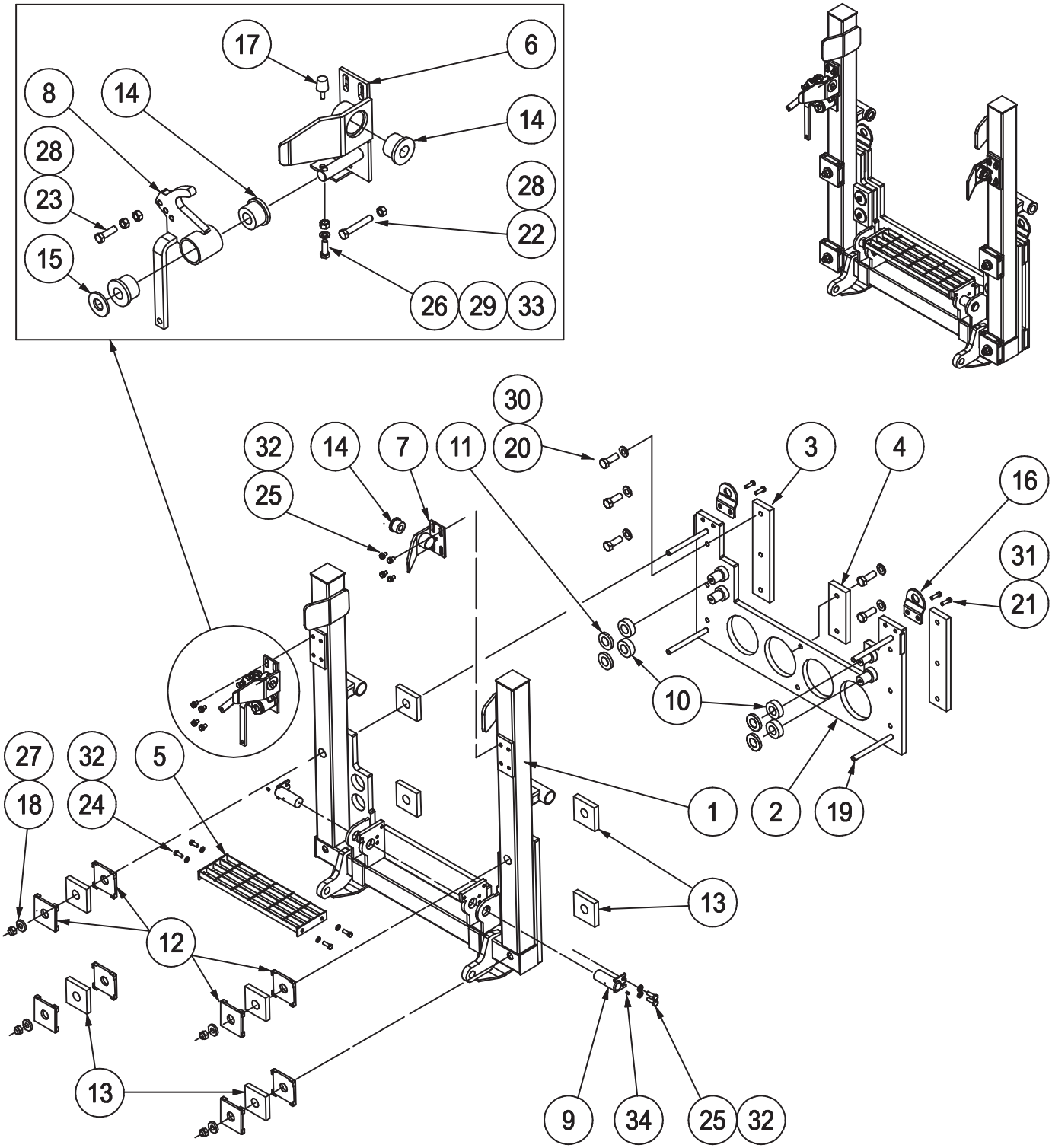

FOLDING STAIRWAY
Komatsu WA1200 Loader

Section 4.1 Base Frame and Mounting PS-23838-A

See Drawing Page 12

PS-23838-A (Inc.Items 1,5,6,7,8,9,10,11,12,13,14,15,17,18,22,23,24,25,26,27,28,29,32,33 & 34)

Item	Part No.	Part Name	Qty		
1	PS-23838	BASE FRAME	1		
2	PSA-WA1200-C01	BASE MOUNTING PLATE	1		
3	PSA-WA1200-C02	WELD PAD-OUTER	2		
4	PSA-WA1200-C03	WELD PAD -INNER	1		
5	PS-23839	TOP STAIR TREAD	1		
6	PS-23841-98	STRIKER-LEFT SIDE	1		
7	PS-23841-99	STRIKER-RIGHT SIDE	1		
8	PS-23854	MANUAL RELEASE LEVER	1		
9	PS-23828	HINGE PIN	2		
10	PS-23836-02	SHEAR ISOLATOR ELEMENT	4		
11	PS-23834-01	SHEAR ISOLATOR CAP	4		
12	PS-23833-99	ISOLATOR COVER PLATE	8		
13	PS-23836-01	FACE ISOLATOR ELEMENT	8		
14	PS-23846-02	LATCH BUSH	4		
15	PS-23846-03-8	RELEASE LEVER SPACER	1		
16	PS-23860	LIFT LUG	2		
17	PS-1066553	LATCH LEVER BUFFER Mackay 12252555 M6	2		
18	PS-23834-03	FACE ISOLATOR WASHER	8		
19	PS-M20X250	THREADED ROD-M20 x 250	4		
20	CPS-M20X60ZP	BOLT-M20 x 60	6		
21	CPS-M16X30ZP	BOLT-M16 x 30	4		
22	CPS-M12X75ZP	BOLT-M12 x 75	1		
23	CPS-M12X40ZP	BOLT-M12 x 40	1		
24	CPS-M12X25ZP	BOLT-M12 x 25	4		
25	CPS-M12X20ZP	BOLT-M12 x 20	8		
26	CPS-M8X35ZP	BOLT-M8 x 35	1		
27	CPS-M20NZP	NUT-M20	4		
28	PS-M12NZP	NUT-M12	2		
29	PS-M8NZP	NUT-M8	1		
30	CPS-M20WH	WASHER-HARDENED-M20	6		
31	CPS-M16WH	WASHER-HARDENED-M16	4		
32	CPS-M12WH	WASHER-HARDENED-M12	16		
33	CPS-M8WH	WASHER-HARDENED-M8	1		
34	PS-61002-2	GREASE NIPPLE	2		

FOLDING STAIRWAY
Komatsu WA1200 Loader

Section 4-2 Stair Assembly PS- 23851-A

See Parts List Page 15

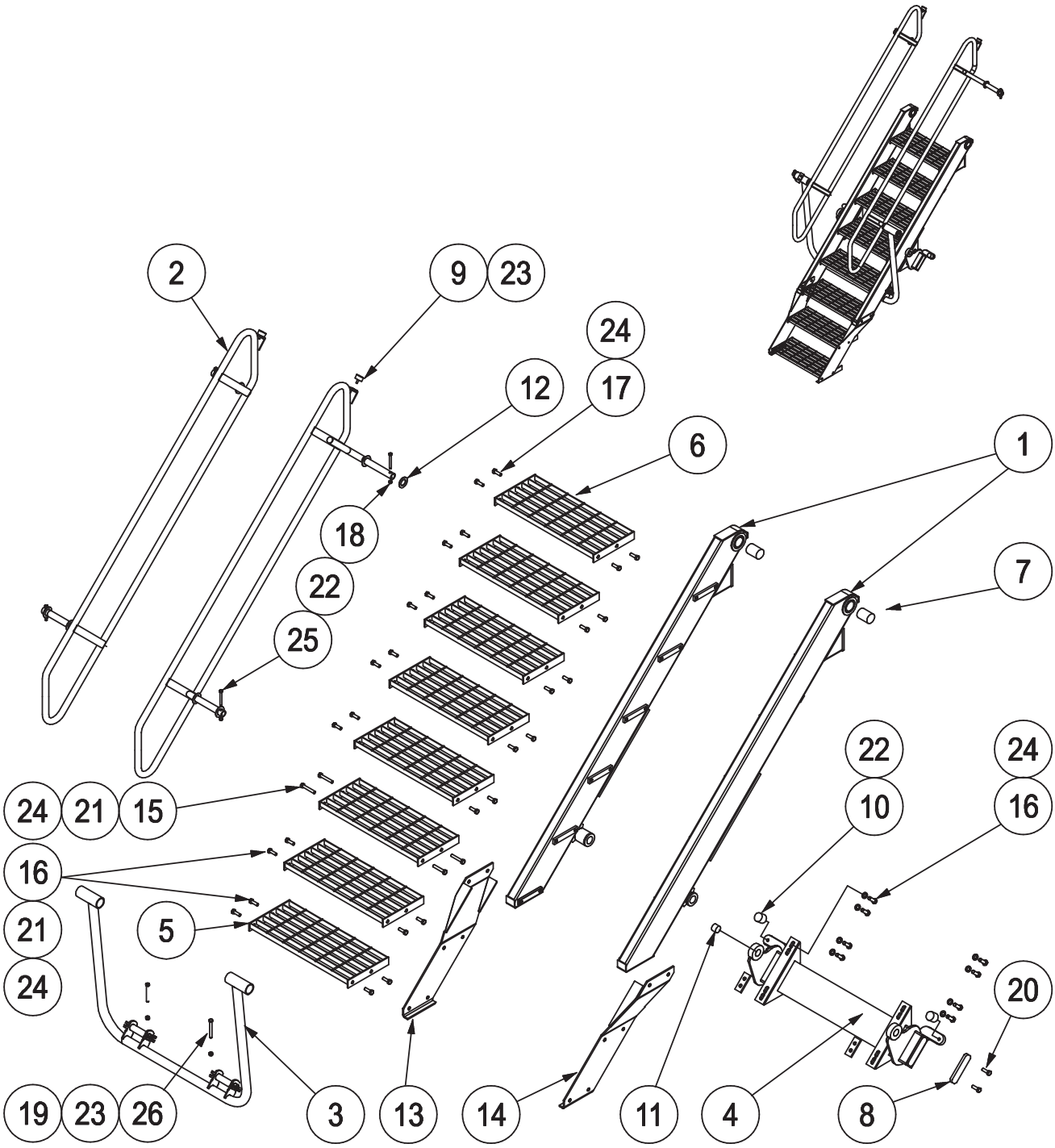

FOLDING STAIRWAY
Komatsu WA1200 Loader

Section 4-2 Stair Assembly PS- 23851-A

See Drawing Page 14

Item	Part No.	Part Name	Qty		
1	PS-23852	STAIR STILE (6 Tread)	1set		
2	PS-23862	STAIR HANDRAIL	1set		
3	PS-23863	HANDRAIL LINK POST	1		
4	PS-23849	STAIR ACTUATOR BEAM	1		
5	PS-22266	STAIR TREAD	7		
6	PS-23839	STAIR TREAD -TOP	1		
7	PS-23857	HINGE BUSH	2		
8	PS-23848-07	BUMPER PAD	2		
9	PS-40002	BUFFER-RUBBER-MACKAY M12402055 M8	2		
10	PS-40003	BUFFER-RUBBER-MACKAY M12503555 M10	2		
11	PS-63009-B	BUSH-Stair Actuator Beam	1		
12	PS-23862-05-3	WASHER	4		
13	PS-23865-LH	STAIR EXTENSION-LEFT	1		
14	PS-23865-LH	STAIR EXTENSION-RIGHT	1		
15	CPS-M12X75ZP	BOLT-M12 x 75	4		
16	CPS-M12X30ZP	BOLT-M12 x 30	16		
17	CPS-M12X20ZP	BOLT-M12 x 20	20		
18	CPS-M10X85ZP	BOLT-M10 x 85	4		
19	CPS-M8X75ZP	BOLT-M8 x 75	2		
20	CPS-M6X15ZP	BOLT-M6 x 15	4		
21	CPS-M12NZP	NUT-M12	4		
22	CPS-M10NN	NUT-NYLOC-M10	6		
23	CPS-M8NN	NUT-NYLOC-M8	6		
24	CPS-M12WH	WASHER-HARDENED-M12	36		
25	CPS-M10WH	WASHER-HARDENED-M10	4		
26	CPS-M8WH	WASHER-HARDENED-M8	2		

FOLDING STAIRWAY
Komatsu WA1200 Loader

Section 4-3 Latch Assembly PS-23847-ASSY

See Drawing Page 17

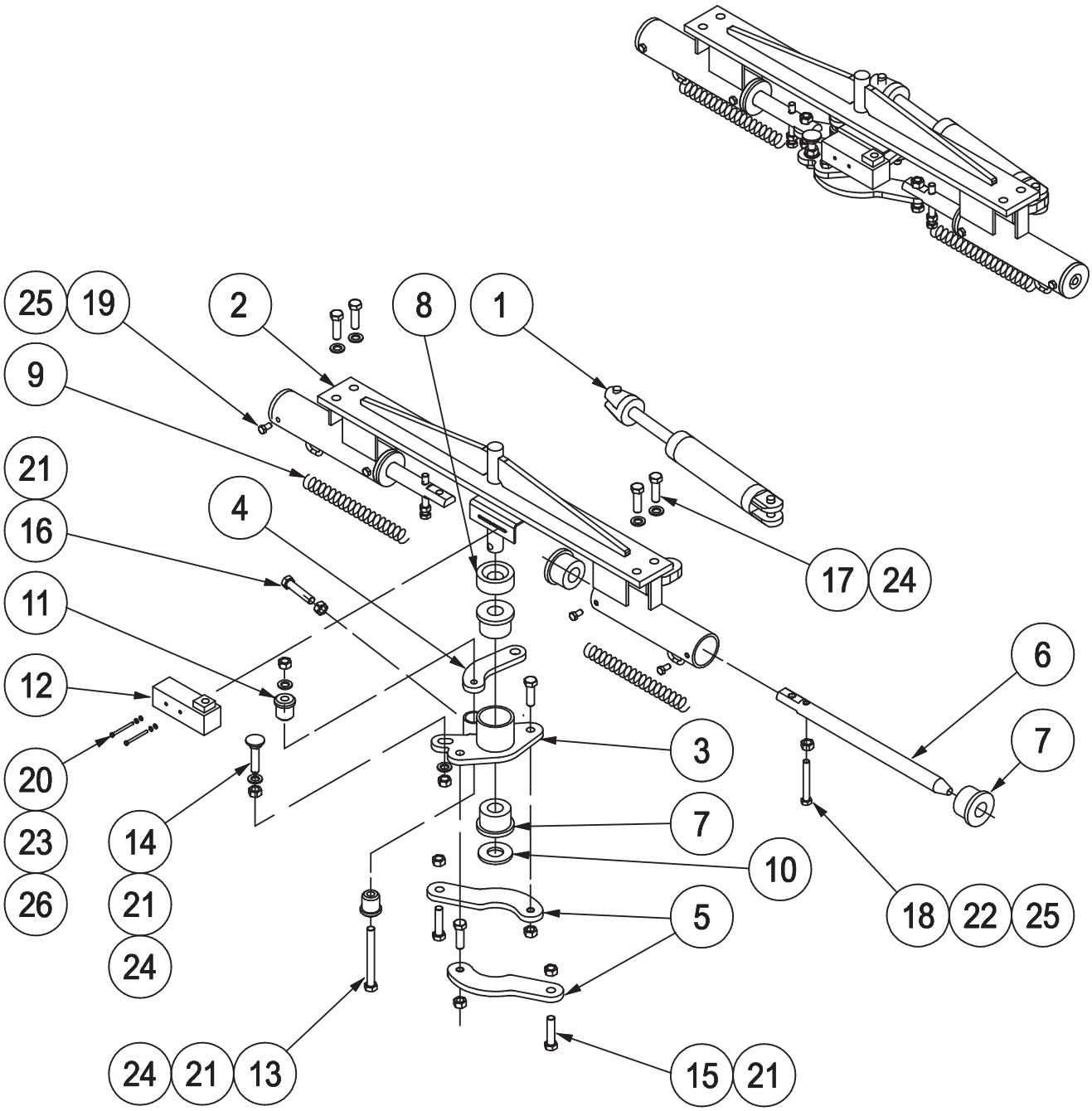

FOLDING STAIRWAY
Komatsu WA1200 Loader

Section 4-3 Latch Assembly PS-23847-ASSY

See Drawing Page 16

Item	Part No.	Part Name	Qty		
1	PS-62997	CYLINDER	1		
2	PS-23842	LATCH BASE	1		
3	PS-23845-99	LATCH WRIST	1		
4	PS-23845-98	ACTUATOR ARM	1		
5	PS-23844-01-10	BOLT LINK	2		
6	PS-23843	LATCH BOLT	2		
7	PS-23846-02	LATCH BUSH	6		
8	PS-23846-01	WRIST SPACER	2		
9	PS-23847	SPRING	2		
10	PS-23844-02-5	WASHER	4		
11	PS-S245	LATCH BUSH-(WRIST PLATE) S245	2		
12	PS-75430	PROXIMITY SWITCH	1		
13	PS-M12X110ZP	BOLT-M12 x 110	1		
14	CPS-M12X55ZP	BOLT-M12 x 55 (Striker)	1		
15	CPS-M12X40ZP	BOLT-M12 x 40	4		
16	CPS-M12X35ZP	BOLT-M12 x 35	1		
17	CPS-M12X25ZP	BOLT-M12 x 25	4		
18	CPS-M10X75ZP	BOLT-M10 x 75	2		
19	CPS-M10X15ZP	BOLT-M10 x 15	4		
20	CPS-M5X45ZP	BOLT-M5 x 50	2		
21	CPS-M12NZP	NUT-M12	1		
22	CPS-M10NZP	NUT-M10	6		
23	CPS-M5NN	NUT-NYLOC-M5	2		
24	CPS-M12WH	WASHER-HARDENED-M12	12		
25	CPS-M10WH	WASHER-HARDENED-M10	6		
26	CPS-M5WH	WASHER-M5	2		

FOLDING STAIRWAY
Komatsu WA1200 Loader

Section 4-4 Hydraulic Cylinders and Plumbing

Cyl P/No. PS- 62996-AH
Latch Cyl PS- 62997-A

See Parts list Pg. 19

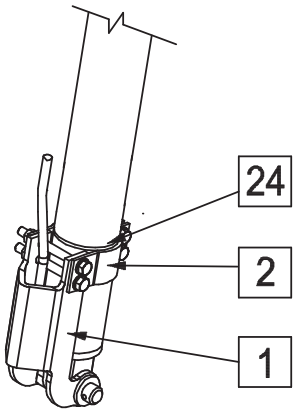

MOUNTINGS

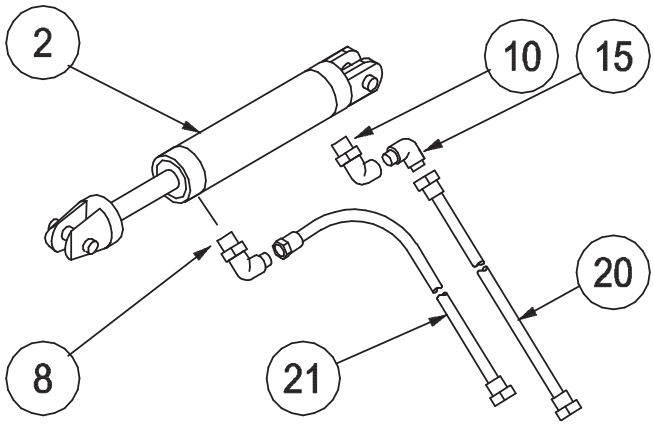

LATCH CYLINDER

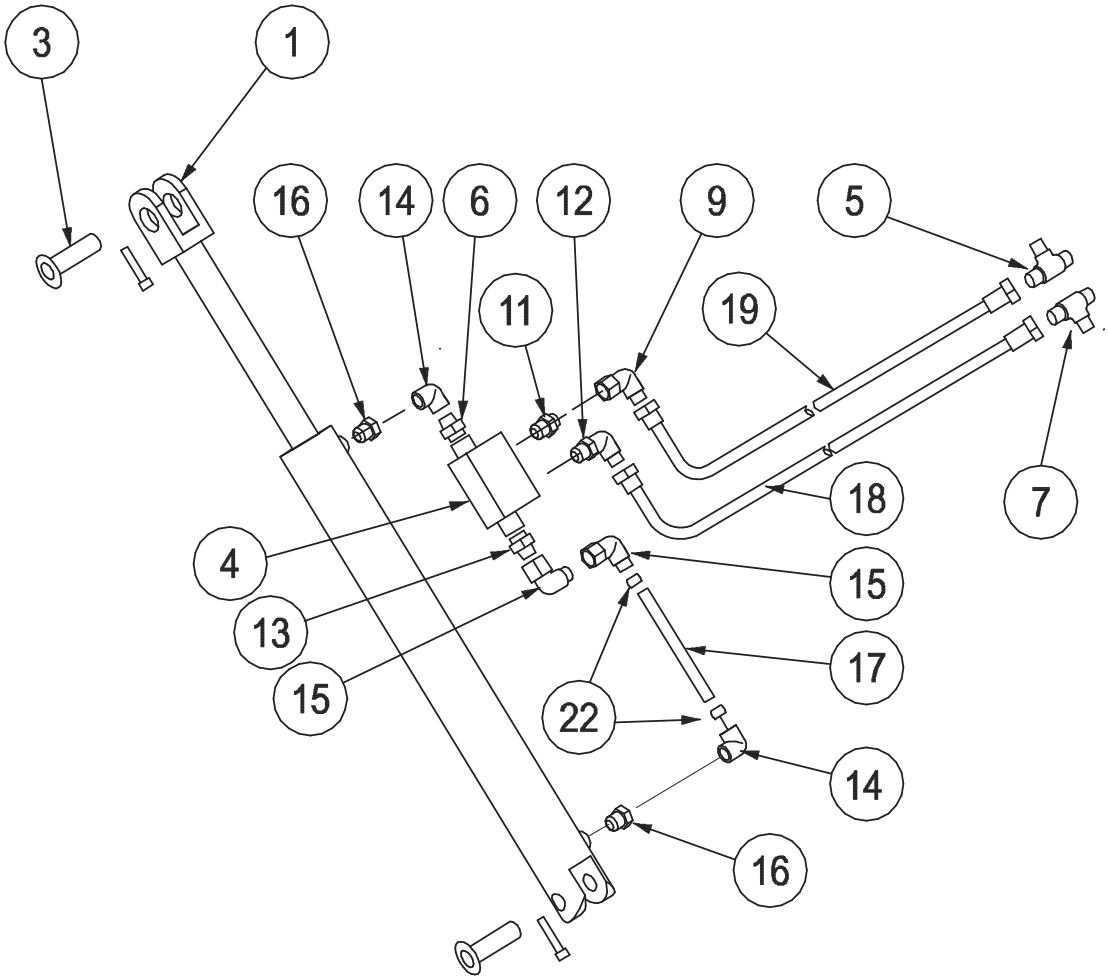

FOLDING STAIRWAY
Komatsu WA1200 Loader

Section 4-4 Hydraulic Cylinders & Plumbing

See Drawing Pg. 18

STAIR & LATCH CYLINDERS

PS-62996-HPK-FS Hard Plumbing Kit (Items 4, 6, 9, 11 - 15, 17 & 22)

Item	Part No.	Part Name	Qty		
1	PS-62996-A	HYDRAULIC CYLINDER ASSEMBLY	1		
-	PS-63103	SEAL KIT-STAIR (NOT SHOWN)	1		
2	PS-62997	HYDRAULIC CYLINDER - LATCH	1		
-	PS-62997-SK	SEAL KIT-LATCH (NOT SHOWN)	1		
3	PS-23856	CYLINDER PINS	2		
4	PS-63201	VALVE - PILOT OPERATED LOCKING	1		
5	PS-61140	FITTING-T -7/16”	1		
6	PS-61145	FITTING - 9/16” JIC SWIVEL	1		
7	PS-61149	FITTING - T 9/16”	1		
8	PS-61150	FITTING - ELBOW 7/16”	1		
9	PS-61151	FITTING - ELBOW 7/16”	1		
10	PS-61152	FITTING - ELBOW 9/16”	1		
11	PS-61153	FITTING - 1/4” BSPPx7/16” STRAIGHT	1		
12	PS-61154	FITTING - ELBOW- O RING 1/4BSPPx9/16”JIC	1		
13	PS-61157	FITTING - STRAIGHT 1/4”BSPPx9/16”JIC	1		
14	PS-61158-5mm	FITTING - 5mm RESTRICTION 90 DEG	2		
15	PS-61159	FITTING- ELBOW 9/16”	3		
16	PS-61163	REDUCER JIC x BSPP	2		
17	PS-61160	TUBE-900/1200	1		
18	PS-60051-1.2M 9/16	HOSE-HYDR. (9/16”JIC ST. SWIVEL 1.2M)	1		
19	PS-60050-1.2M 7/16	HOSE-HYDR. (7/16”JIC ST. SWIVEL 1.2M)	1		
20	PS-60051-1.65M 9/16	HOSE-HYDR. (9/16”JIC ST. SWIVEL 1.65M)	1		
21	PS-60050-1.8M 7/16	HOSE-HYDR. (7/16”JIC ST. SWIVEL 1.8M)	1		
22	PS-60031-FT	FERRULES	2		

MOUNTINGS

Item	Part No.	Part Name	Qty		
1	PS-23855-98	PORT SHIELD PLATE	1		
2	PS-23855-02-5	PORT SHIELD CLAMP	2		

Section 4-4 Hydraulic Cylinder (Valve Diagram)

Double Acting Hydraulic System with
directional Control Valve and Cylinder
Lock Valve

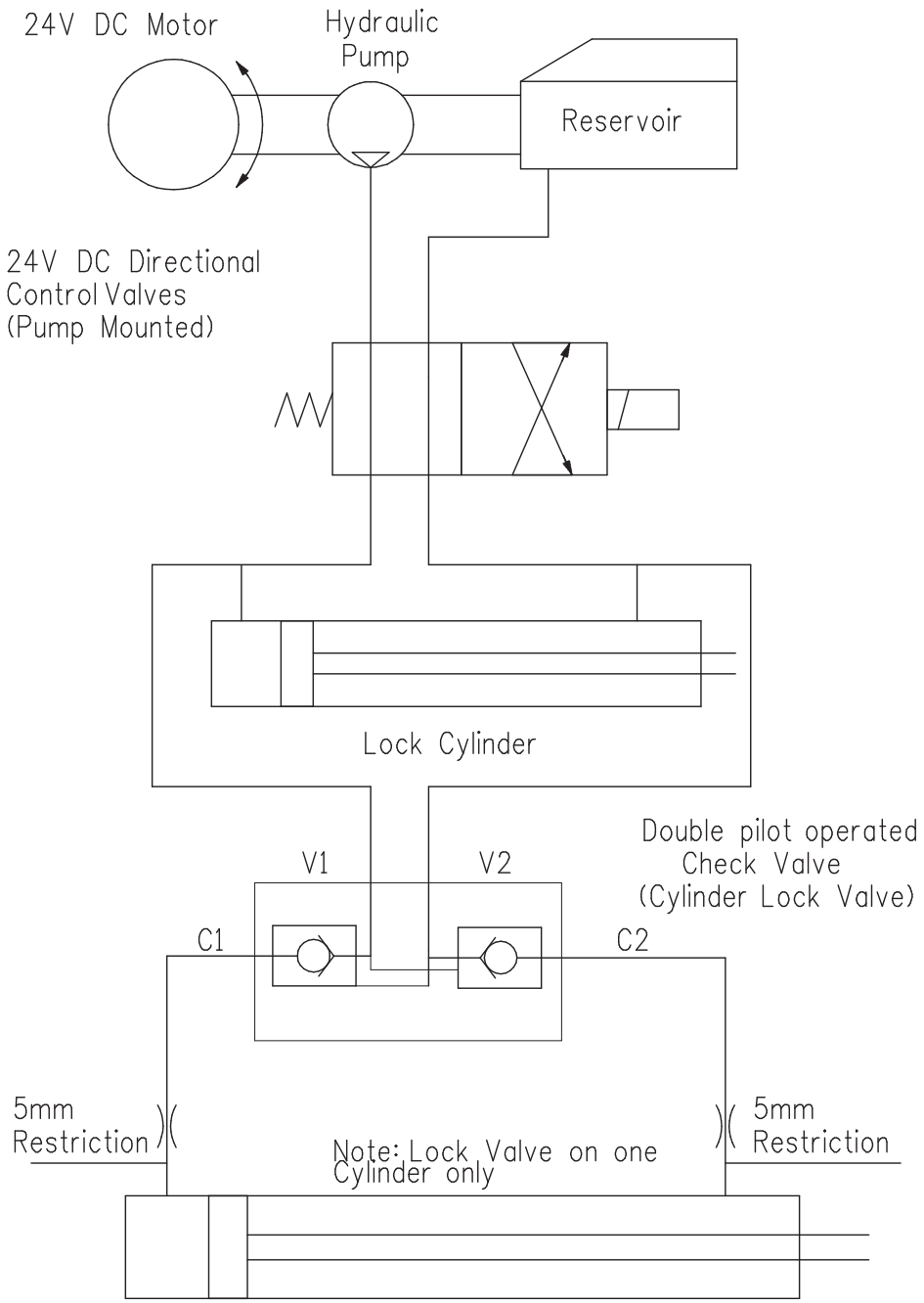

FOLDING STAIRWAY
Komatsu WA1200 Loader

Section 4-5 Power Pack PS- 80103A-SLD

See Parts List Pg 23

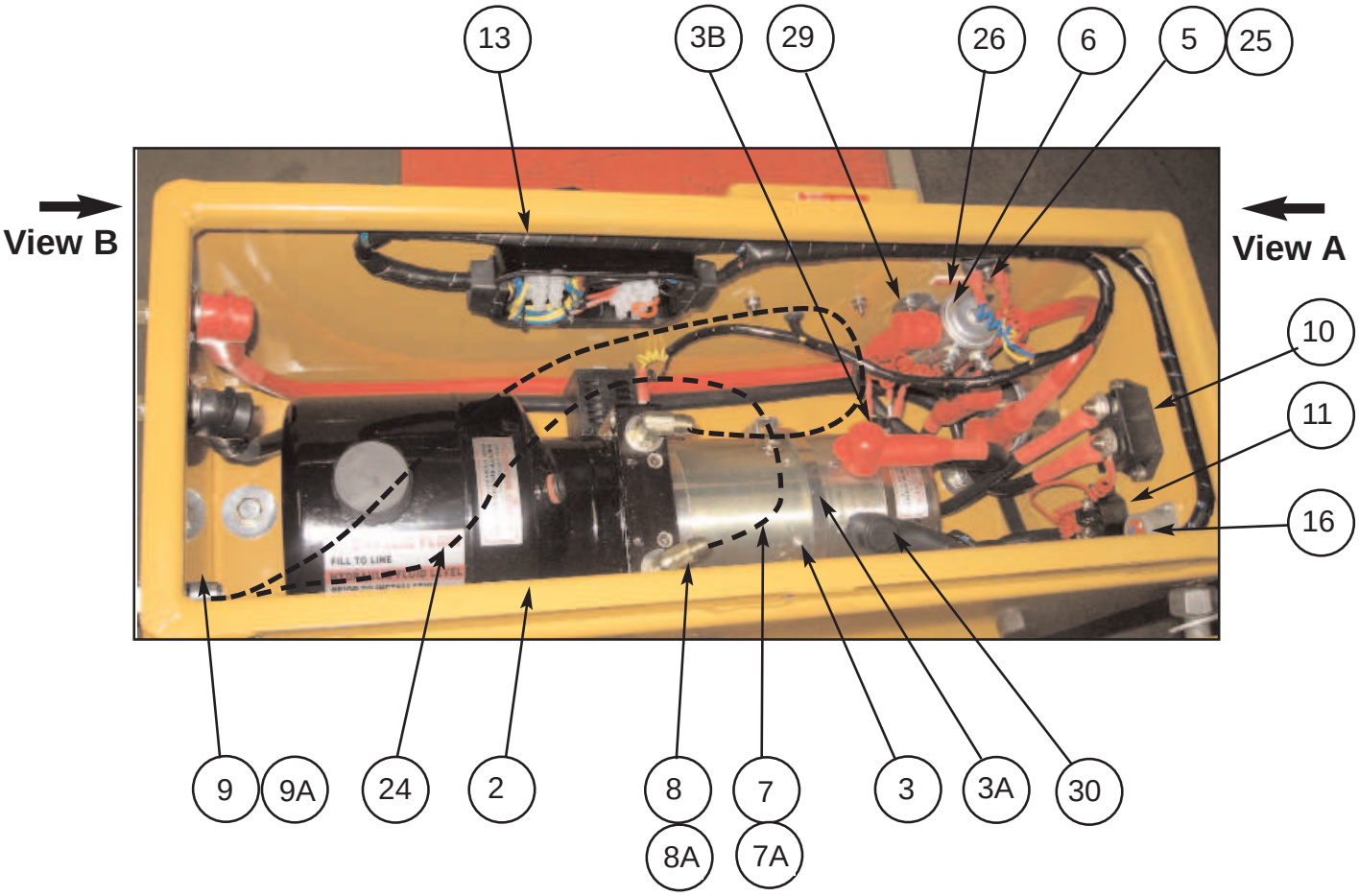

Hoses shown dotted

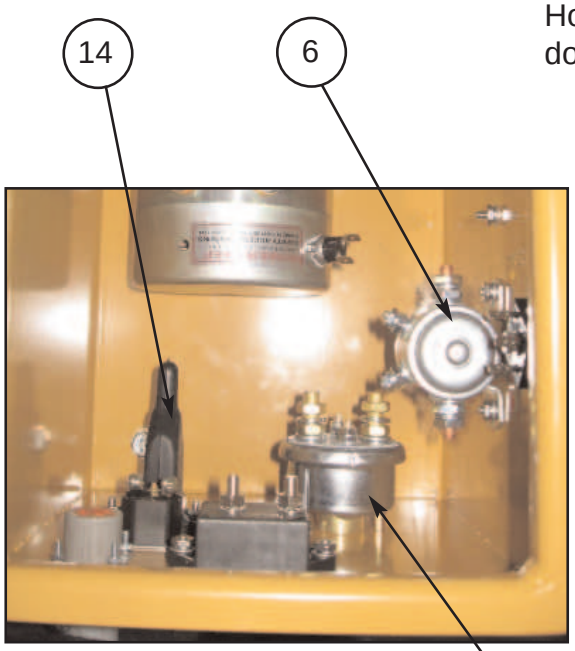

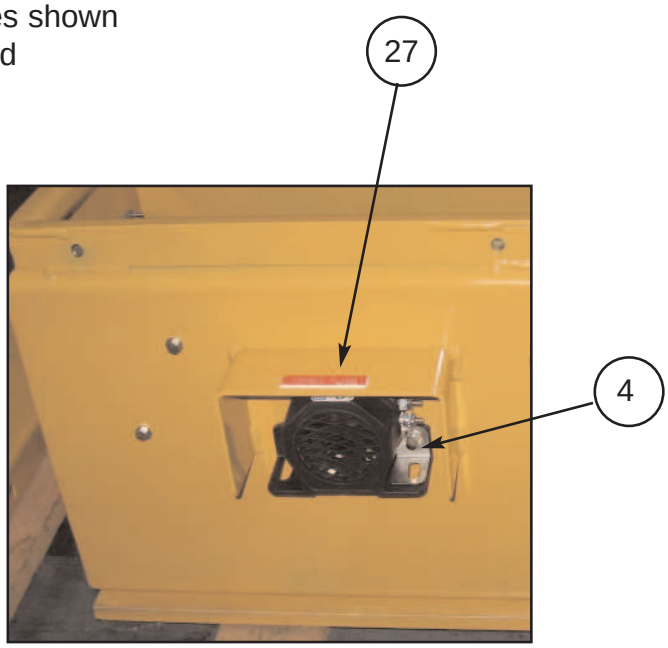

FOLDING STAIRWAY

Komatsu WA1200 Loader

Section 4-5 Power Pack PS-80103A-SLD

See Parts List Pg 23

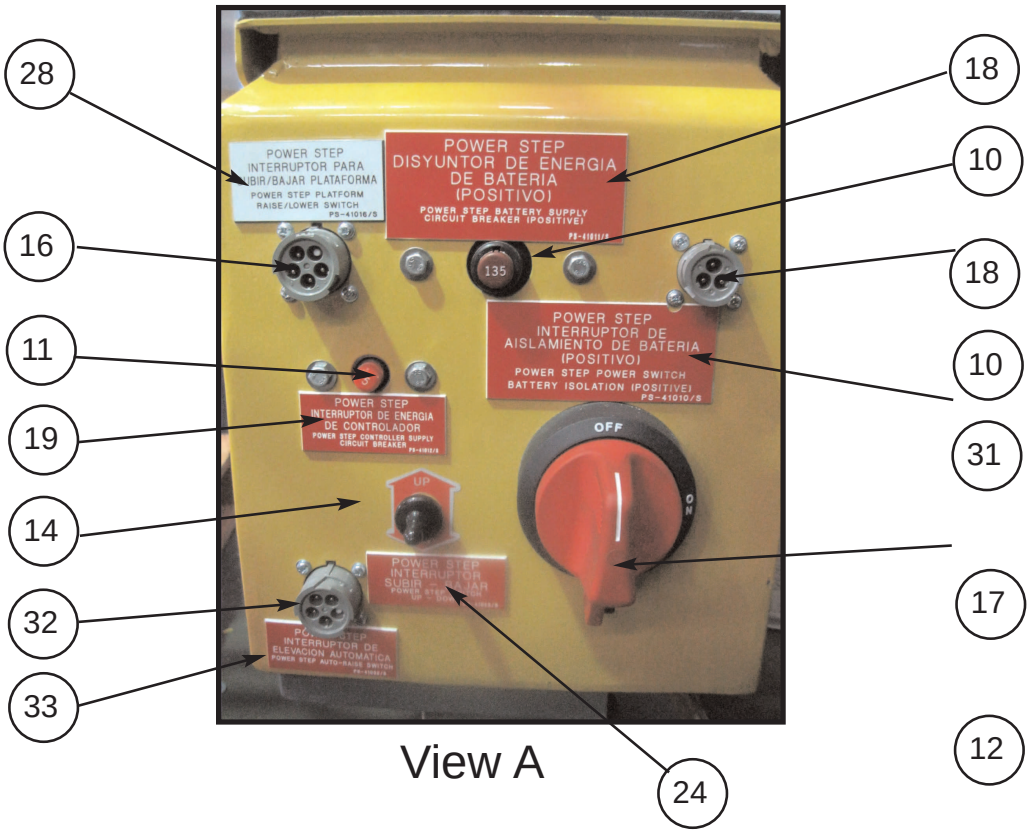

View A

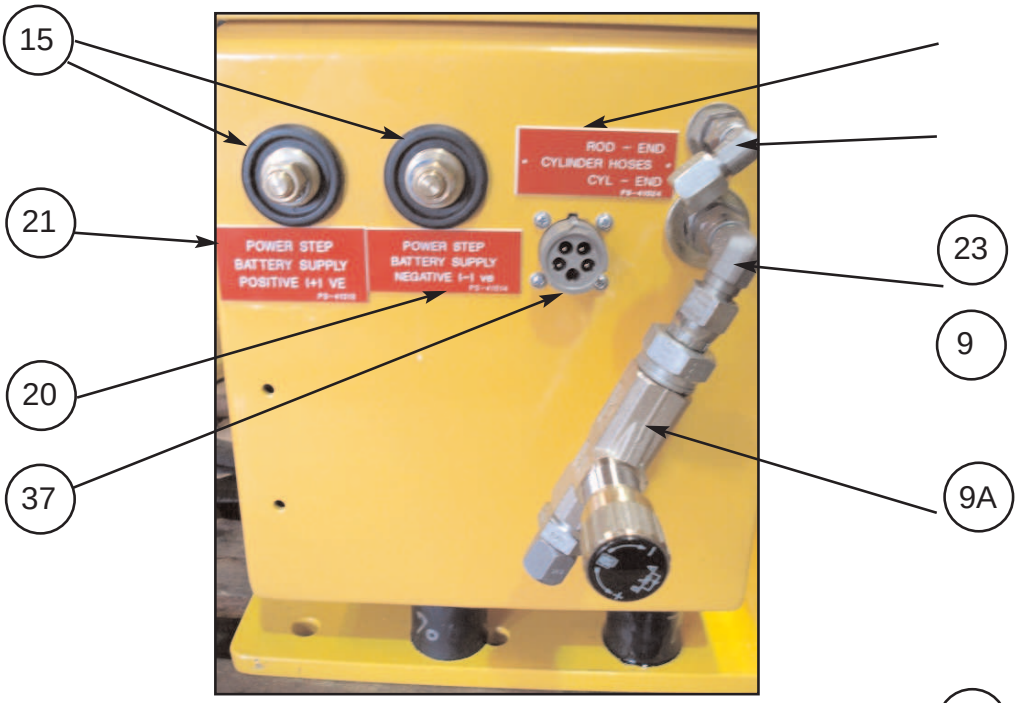

View B

NOTE.

THE RELIEF PRESSURE OF THE POWERPACK IS TO BE SET TO 2800PSI.
IF THE POWERPACK IS REPLACED,THIS RELIEF PRESSURE WILL NEED TO BE RESET USING INLINE GAUGES.
FAILURE TO DO SO MAY RESULT IN ACCIDENT OR INJURY

FOLDING STAIRWAY
Komatsu WA1200 Loader

Section 4-5 Power Pack PS-80103A-SLD

See Photos Pg 21 & 22

Item	Part No.	Part Name	Qty		
1	PS-80103A-SLD	POWER PACK ASSEMBLY	1		
2	PS-21107-METAL	MOTOR ENCLOSURE- SEALED ST/ST	1		
3	PS-80103A	POWER PACK	1		
3A	PS-80103-CLAMP	CLAMP ELECTRIC MOTOR	1		
3B	PS-84201-100	HEAT SENSOR	1		
4	PS-82415	AUDIBLE ALARM	1		
5	PS-84214	BRIDGE RECTIFIER	1		
6	PS-82492	SOLENOID 24V START MOTOR	1		
7	PS-60051-M/E Box 9/16”	HYDR. TUBE 9/16”	1		
7A	PS-60050-M/E Box 7/16”	HYDR. TUBE 7/16”	1		
8	PS-61152	HYDRAULIC FITTING 9/16”	1		
8A	PS-61150	HYDRAULIC FITTING 7/16”	1		
9	PS-61157	HYDRAULIC FITTING 7/16”	1		
9A	PS-61159	HYDRAULIC FITTING 9/16”	1		
10	PS-84213	135A CIRCUIT BREAKER	1		
11	PS-84212	5A CIRCUIT BREAKER	1		
12	PS-84303	ISOLATION SWITCH	1		
13	PS-1712080	SEALED WIRING BOX	1		
14	PS-73012	TOGGLE SWITCH KIT	1		
15	PS-82493	BATTERY FEED STUDS	2		
16	PS-HD10-5-16P	5 PIN SOCKET	1		
17	PS-41010	DECAL-Battery Isolation	1		
18	PS-41011	DECAL-Battery Supply	1		
19	PS-41012	DECAL-Controller Supply	1		
20	PS-41013	DECAL-Battery Supply-Positive	1		
21	PS-41014	DECAL-Battery Supply-Negative	1		
22	PS-41023	DECAL-Up/Down	1		
23	PS-41024	DECAL HYDRAULIC-HOSES	1		
24	PS-41041	DECAL OIL TANK	1		
25	PS-41019	DECAL BRIDGE RECTIFIER	1		
26	PS-41017	DECAL SOLENOID	1		
27	PS-41018	DECAL ALARM	1		
28	PS-41016	DECAL RAISE/LOWER SWITCH	1		
29	PS-73010	RUBBER BOOT RED	6		

FOLDING STAIRWAY
Komatsu WA1200 Loader

Section 4-5 Power Pack PS-80103A-SLD

See Photos Pg 21 & 22

Item	Part No.	Part Name	Qty		
30	PS-73009	RUBBER BOOT BLACK	3		
31	PS-HD10-3-16P	3 PIN SOCKET (PARK BREAK)	1		
32	PS-HD10-5-16P	5 PIN SOCKET (AUTO-RAISE)	1		
33	PS-41032	DECAL AUTO-RAISE SOCKET	1		
34	PS-60051-3.5M	HYDRAULIC HOSE 9/16” x 3.5M	1		Not Shown
35	PS-60050-3.5M	HYDRAULIC HOSE 7/16” x 3.5M	1		Not Shown
36	PS-63202A	VALVE FITTING (FLOW CONTROL VALVE)	1		
37	PS-HD10-5-16P	5 PIN SOCKET	1		

FOLDING STAIRWAY
Komatsu WA1200 Loader

Section 4-6 Electrical Controls

Control Pendant Switch
Mounted on Handrail

Proximity Switch Assembly
Mounted on Fixed Landing

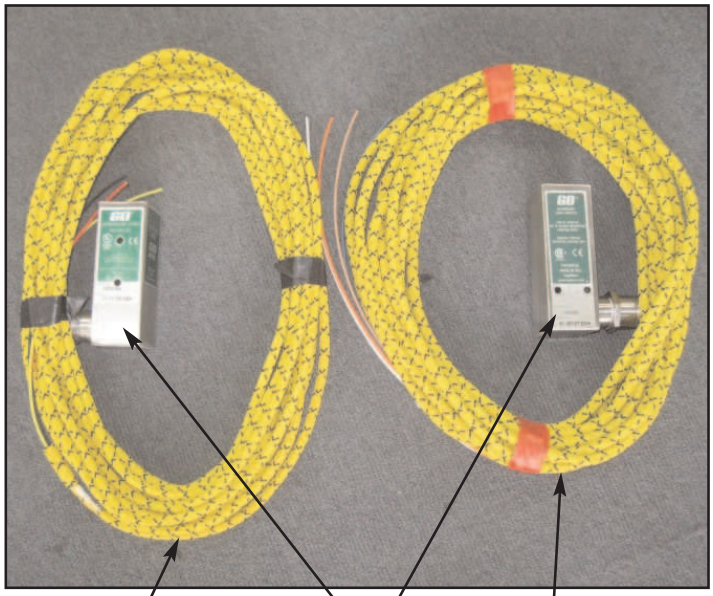

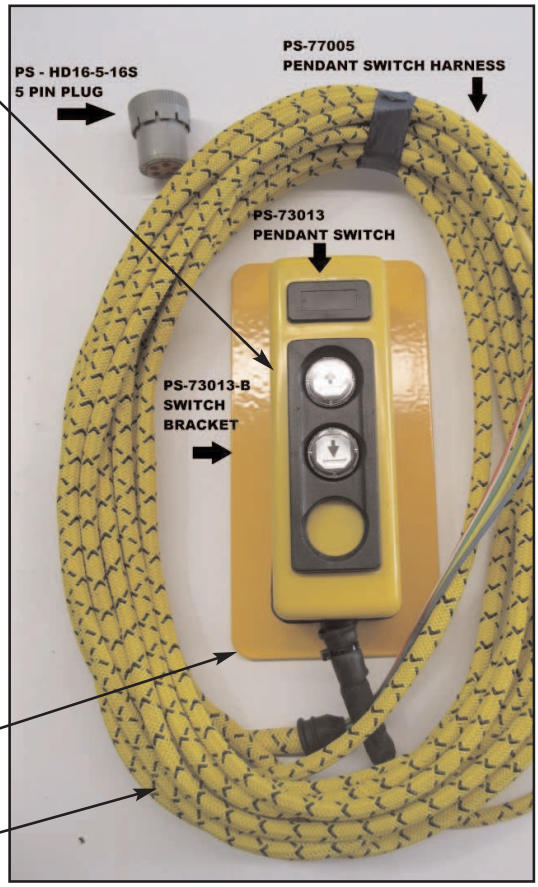

1 2 3 4 5 6

Cab Harness & Equipment
Refer Wiring Harness Drawings

7 8

FOLDING STAIRWAY
Komatsu WA1200 Loader

Section 4-6 Electrical Controls
See Page 25

Item	Part No.	Part Name	Qty		
1	PS-73013	CONTROL PENDANT SWITCH	1		
2	PS-73013-B	CONTROL PENDANT BRACKET	1		
3	PS-77005	HAND RAIL SWITCH HARNESS	1		
4	PS-77009AR	AUTO RAISE HARNESS	1		Optional only
5	PS-77004	CABIN TO SWITCH HARNESS	1		
6	PS-75430	PROXIMITY SWITCH	2		1 x Optional
7	PS-77002	CABIN BOX LED LIGHT INDICATOR	1		
8	PS-77003	WIRING HARNESS IN CABIN	1		

WARNING

LOW VOLTAGE BATTERIES WILL HARM THE FUNCTION OF THE POWER PACK AND THE CONTROL SWITCHES.

DAMAGE RESULTING DUE TO LOW VOLTAGE BATTERIES WILL VOID WARRANTY ON ALL ELECTRICAL COMPONENTS.

Section 4-6 Electrical System Wiring Page 1

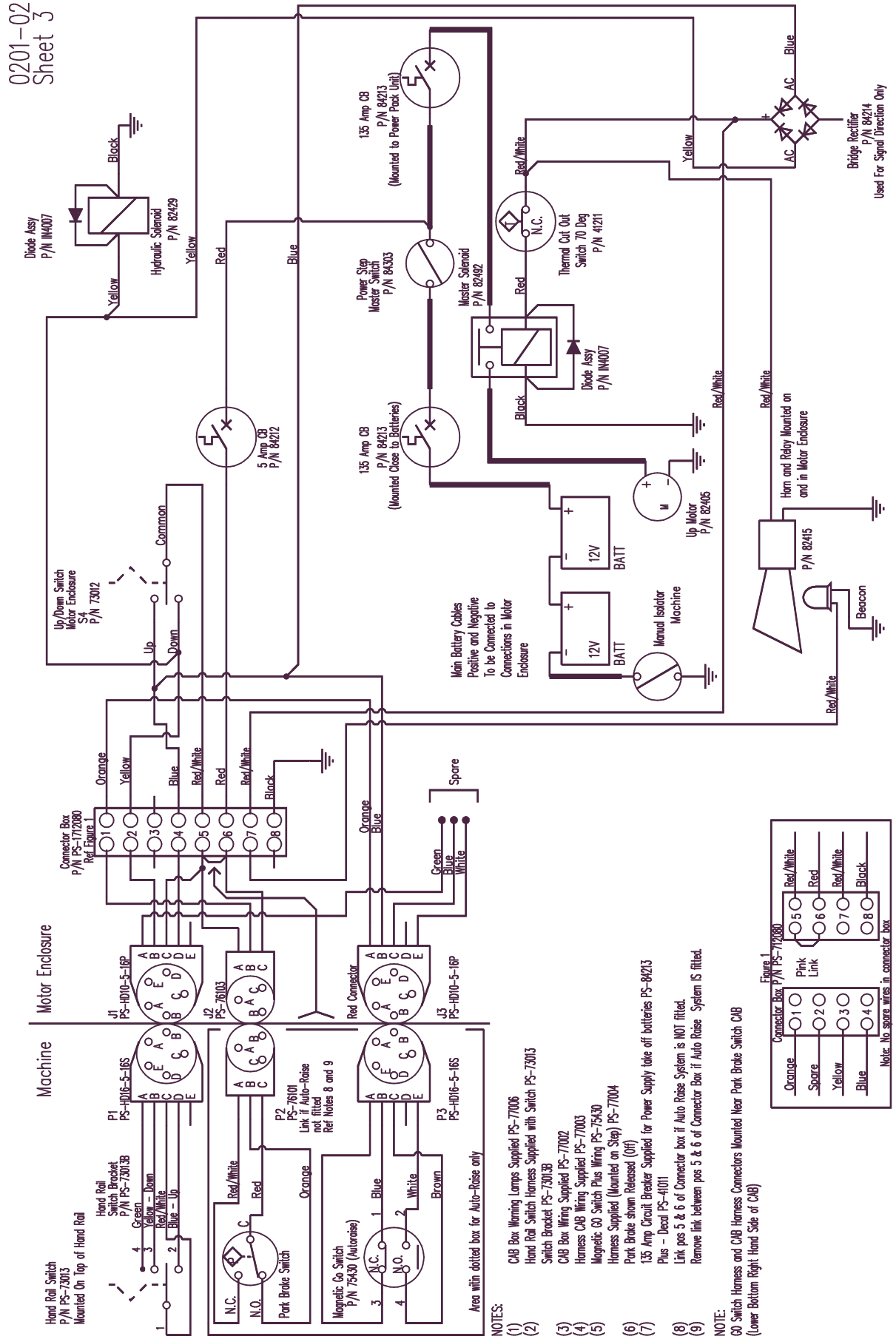

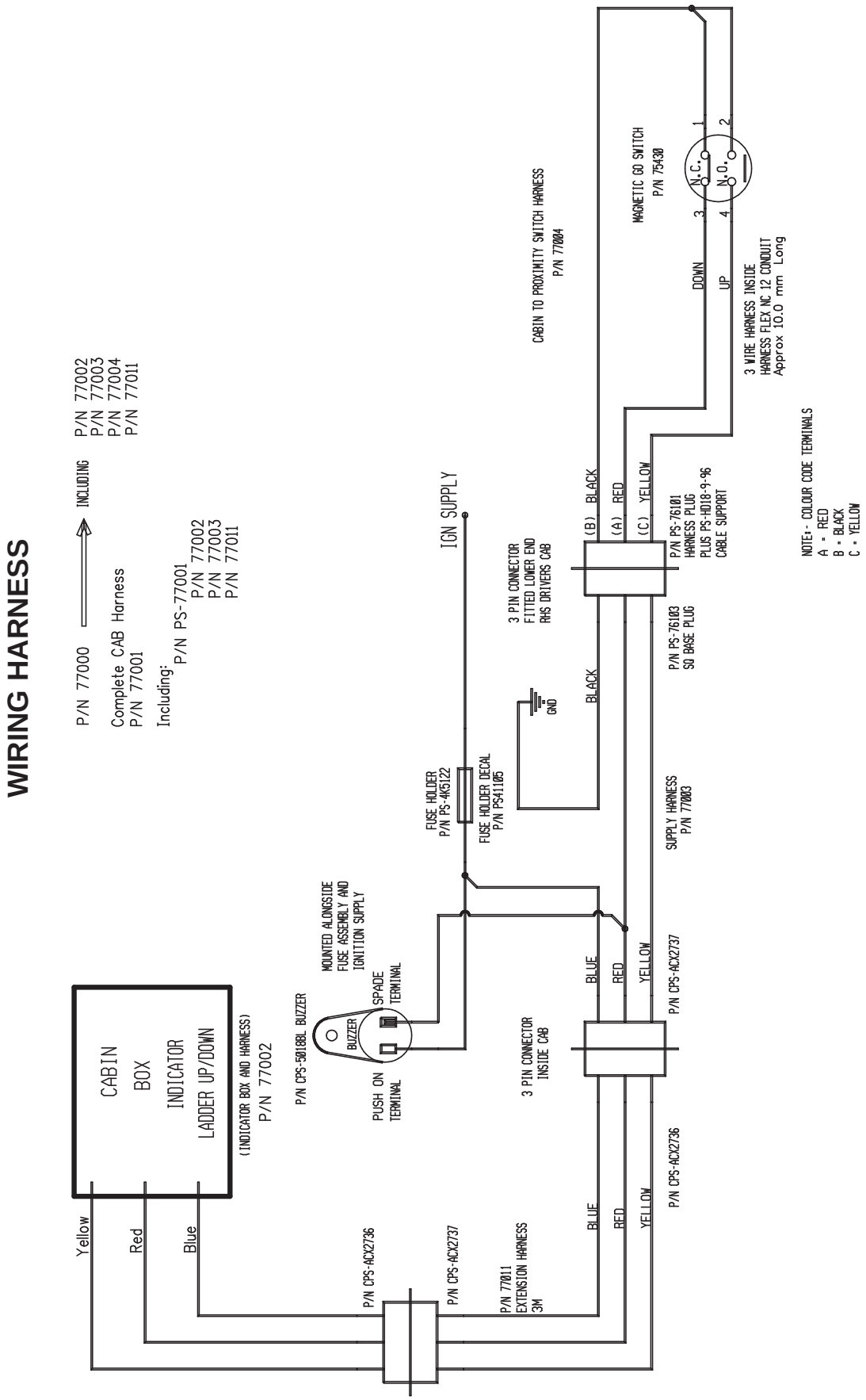
WIRING HARNESS
P/N 77000
INCLUDING
P/N 77002
P/N 77003
P/N 77004
P/N 77011
Complete CAB Harness
P/N 77001
Including:
P/N PS-77001
P/N 77002
P/N 77003
P/N 77011
CABIN BOX INDICATOR LADDER UP/DOWN
(INDICATOR BOX AND HARNESS)
P/N 77002
Yellow
Red
Blue
P/N CPS-ACX2736
P/N CPS-ACX2737
P/N 77011
EXTENSION HARNESS
3M
P/N CPS-50188L BUZZER
BUZZER
SPADE TERMINAL
PUSH ON TERMINAL
MOUNTED ALONGSIDE FUSE ASSEMBLY AND IGNITION SUPPLY
FUSE HOLDER
P/N PS-4K5122
FUSE HOLDER DECAL
P/N PS41105
IGN SUPPLY
GND
3 PIN CONNECTOR
INSIDE CAB
BLUE
RED
YELLOW
BLACK
3 PIN CONNECTOR
FITTED LOWER END
RHS DRIVERS CAB
(B) BLACK
(A) RED
(C) YELLOW
P/N CPS-ACX2737
P/N CPS-ACX2736
SUPPLY HARNESS
P/N 77003
P/N PS-76103
SO BASE PLUG
P/N PS-76101
HARNESS PLUG
PLUS PS-HD18-9-96
CABLE SUPPORT
CABIN TO PROXIMITY SWITCH HARNESS
P/N 77004
MAGNETIC GO SWITCH
P/N 75430
N.C.
N.O.
1
2
3
4
DOWN
UP
3 WIRE HARNESS INSIDE
HARNESS FLEX NC 12 CONDUIT
Approx 10.0 mm Long
NOTE:- COLOUR CODE TERMINALS
A - RED
B - BLACK
C - YELLOW

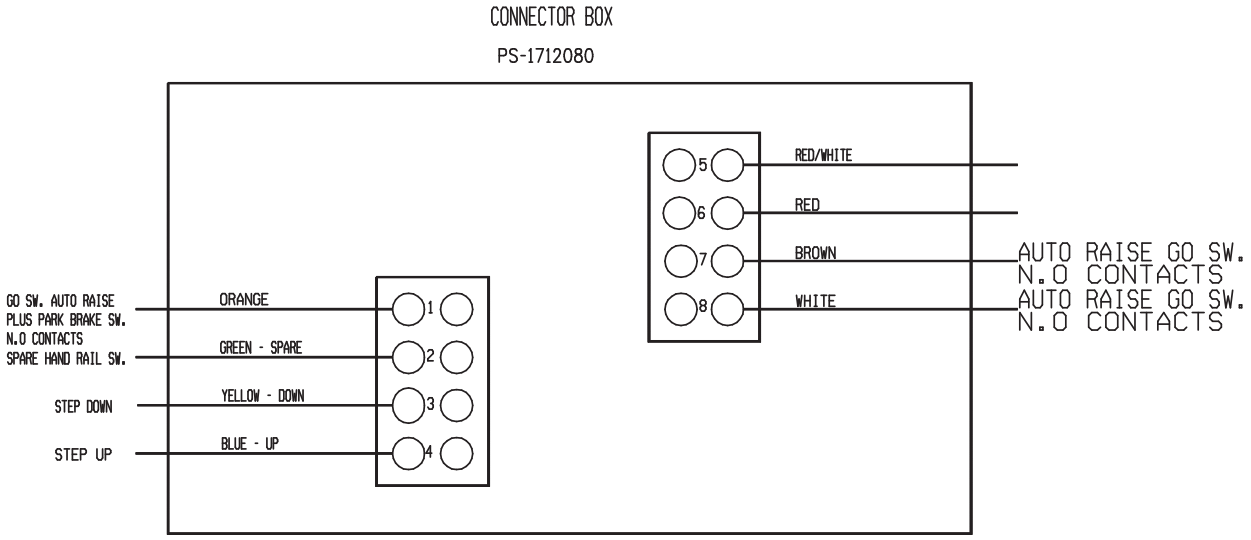

PARK BRAKE HARNESS P/N PS 77006-PB

			3 PIN PLUG CONNECTOR PINS MOTOR ENCLOSURE	
RED	-	COM	(C)	LENGTH 10m
RED/WHITE	-	N.C.	(A)	(HARNESS FLEX NO 12
ORANGE	-	N.O.	(B)	

GO SWITCH HARNESS (CABIN TO GO SWITCH) - P/N PS-77009-AR
(CABIN INDICATOR LADDER UP/DOWN)

			5 PIN PLUG CONNECTOR PINS MOTOR ENCLOSURE	
BLUE	-	NO 1 TERMINAL N.C. CONTACT	(B)	
WHITE (SPARE)	-	NO 2 TERMINAL N.O. CONTACT	(D)	LENGTH 10m
ORANGE				(HARNESS FLEX NO 12
RED	-	NO 3 TERMINAL N.C. CONTACT	(A)	
BROWN (SPARE)	-	NO 4 TERMINAL N.O. CONTACT	(C)	

GO SWITCH HARNESS (CABIN TO GO SWITCH) - P/N PS-77004
(CABIN INDICATOR LADDER UP/DOWN)

COLOUR			3 PIN PLUG CONNECTOR PINS LOWER R/H OUTSIDE CAB	
BLACK	-	NO 1 TERMINAL N.C. CONTACT	(B)	
BLACK	-	NO 2 TERMINAL N.O. CONTACT		LENGTH 10m
(BRIDGE NO 1 AND 2 IN GO SW.)		NO 3 TERMINAL N.C. CONTACT	(A)	(HARNESS FLEX NO 12
YELLOW	-	NO 4 TERMINAL N.O. CONTACT	(C)	

WIRING HARNESS

0201–02

Go Switch
Auto – Raise Connection

N.C.	–	Orange	–	Blue
N.O.	–	Brown	–	White (Spare)

Go Switch – Cabin Indicator
Up/Down Lights Connection

N.C.	–	Red	–	Black	Linked
N.O.	–	Yellow	–	Black	

Hand Control Switch – Mounted on Hand Rails (P/No 73013)
Power Step Wiring Harness (10m) and Connections Supplied

Contacts				
1	–	Red/White	–	Power Supply
2	–	Blue	–	Up Switch
3	–	Yellow	–	Down Switch
4	–	Green	–	Start Sol Motor [FRS Power Pack only (Spare)]
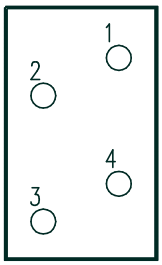
Pendant Switch
Standard Switch Wiring and Connections