# FOLDING STAIRWAY

## Komatsu PC3000 Excavator

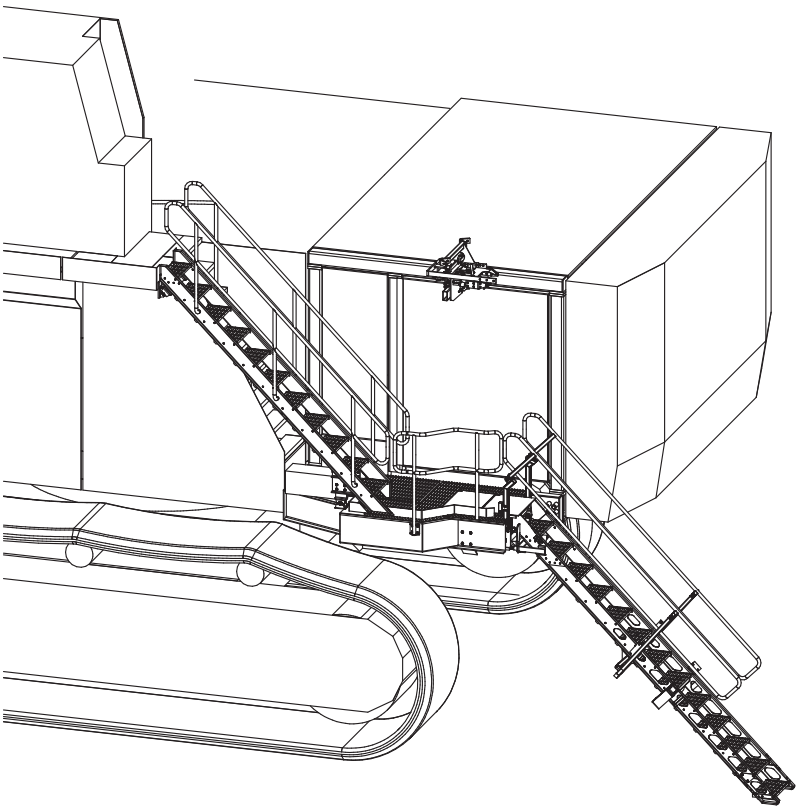

Serial No: PC3000 - 001 to ~
Model No: PSA-PC3000
Date Manufactured: June 2013

# FOLDING STAIRWAY
## Komatsu PC3000 Excavator

## CONTENTS


Page 3 Section 1 Installation and Mounting instructions

3 General Arrangement - 24290

4 Installation Drawings - General Arrangement 24290
- Battery Box 24289
- Fixed Stair Mounting Pads 24291
- Structural Reinforcements 24288
- Fixed Stair Mounting Mounting 24292
- Latch Mounting/ Adjustments 24286

14 Section 2 Recommended Maintenance Procedure

15 Section 3 Operating Procedure

Section 4 Drawings and Repair Parts lists

16 4 Assembly Complete

17 4-1 Fixed Stair
Parts List

19 4-2 Landing Assembly - Battery Box
Parts List

21 4-3 Box Landing Stair
Parts List

23 4-4 Stair Box Landing Assembly
Parts List

25 4-5 Latch Mounting Assembly
Parts List

26 4-6 Latch Assembly
Parts List

29 4-7 Hydraulic Cylinder Assembly
Hydraulic Cylinder (Valve Diagram)
Emergency Valves

33 4-8 Power Pack
Valve Diagram

36 4-9 Electrical Controls
Parts List
Wiring Diagrams Sheet 1 to 7

# FOLDING STAIRWAY
## Komatsu PC3000 Excavator

## Section 1 Installation Instruction Drawings - 24290
## General Arrangement

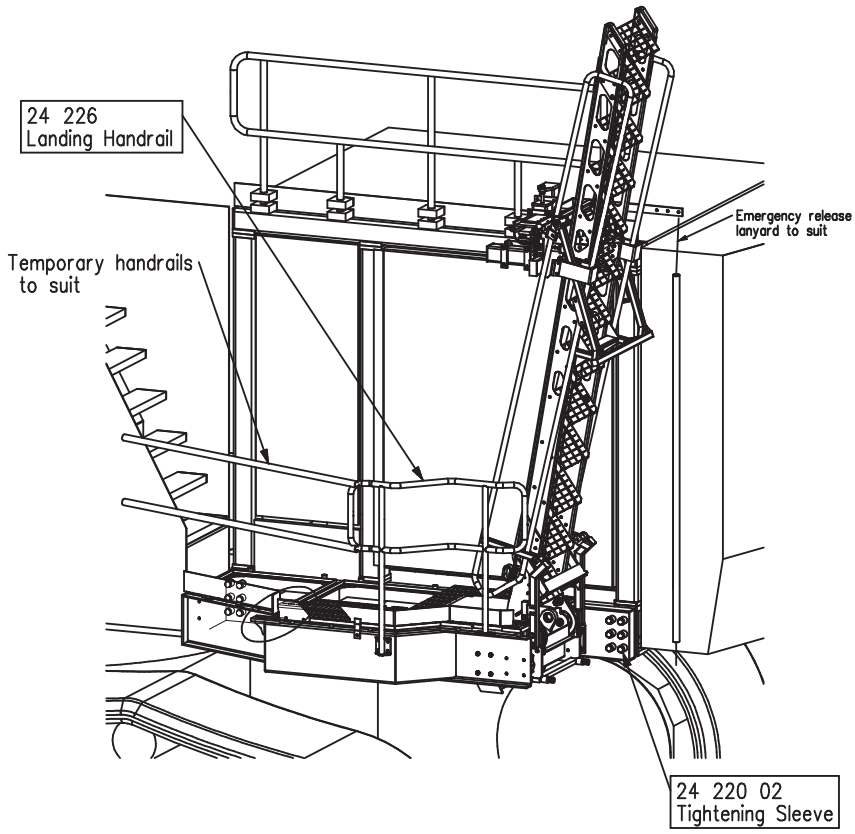


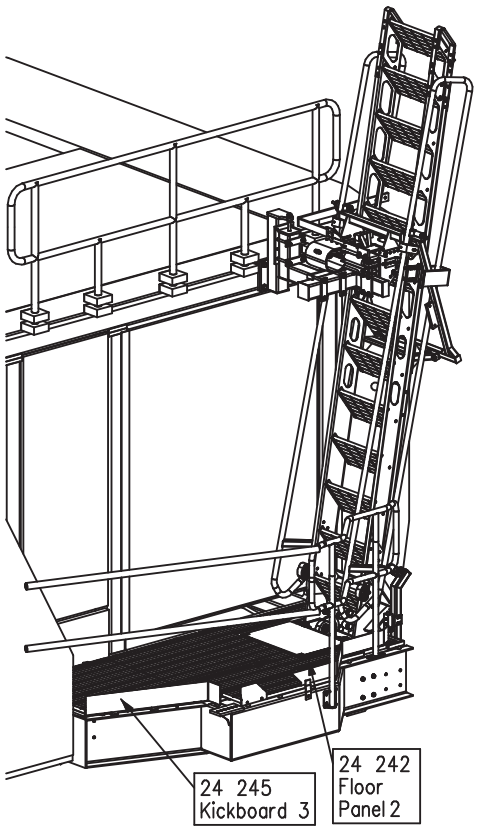


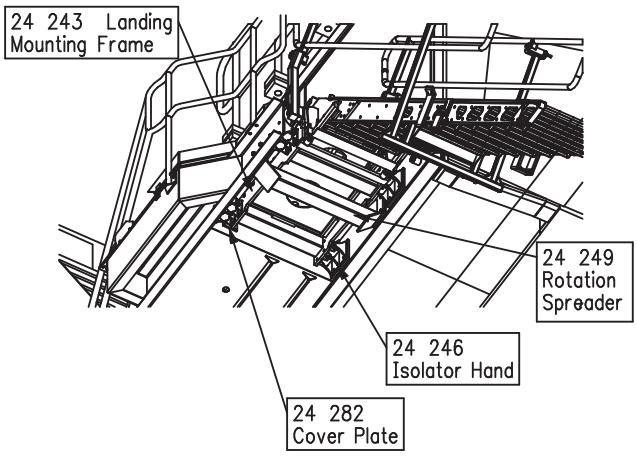


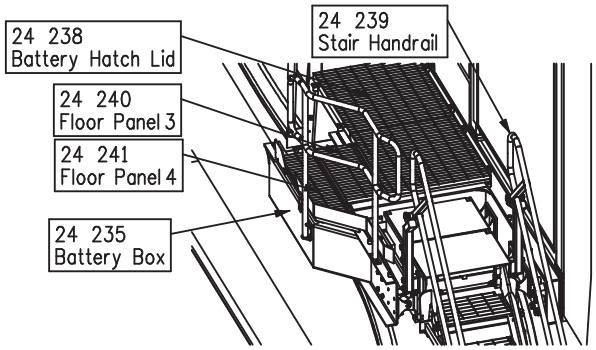

# FOLDING STAIRWAY
## Komatsu PC3000 Excavator

## Section1 Installation and Mounting Instructions Battery Box PS-24289

**NOTE**
**Follow all on-site/Mine lifting and safety procedures when installing Power Step Stairway to Excavator.**

1. Per **View Z**, fit the battery box to the bolting pads at the bottom of the front face of the engine module.

2. Weld the bolting pad to the head beam or the engine module, per **Views Y & Z**.

3. Assemble/fit the stair set and latch per Drg 24 290

4. Fit a temporary handrail to suit, until the fixed upper stair is installed. Per Drg 24 290.

Welding:
- Cat SP to AS1554 unless specifically directed otherwise
-6 cfw uno
Use safe lifting and working procedures at all times.
Vary the order of tasks in the installation instructions to suit prevailing circumstances at the time.

# FOLDING STAIRWAY
## Komatsu PC3000 Excavator

## Section 1 Installation Instructions - Battery Box 24289

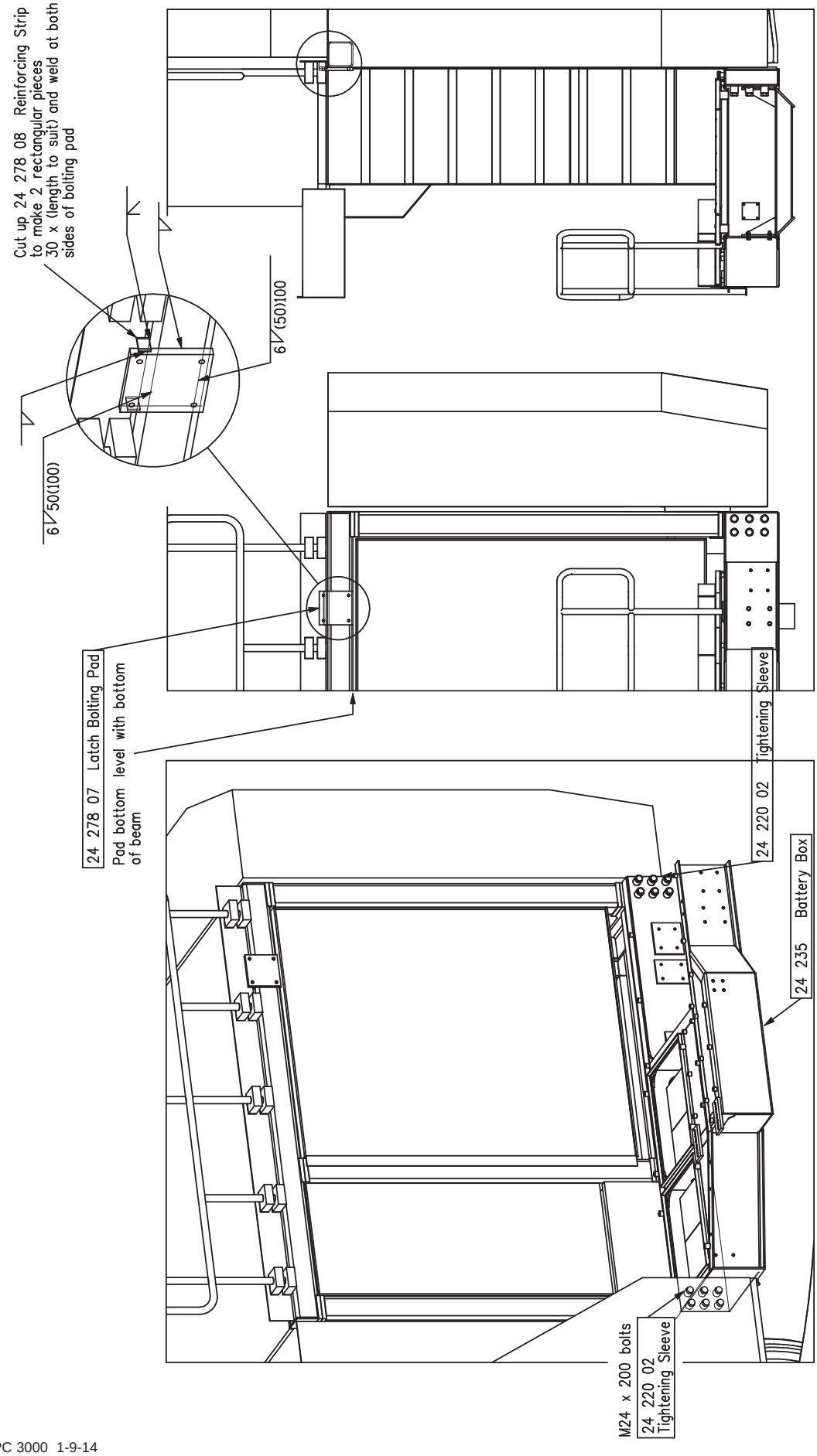

# FOLDING STAIRWAY
## Komatsu PC3000 Excavator

## Section 1 Installation Instructions - Fixed Stair Mounting Pad 24291

**PROCEDURE**
**See Dwg 24291 Pg. 6**

1. Measuring sideways from the Isolator Pads on top of the Battery Box and downwards from the existing flooring on the cabin walkway, tack weld the Top Mounting Pads to the existing kickboard of the cabin walkway, per **View Z-2** and **Detail Y**.

2. Cut away existing kickboard of cabin walkway per **View Z-2** and **Detail Y**

3. After trying the top, fixed stair in position (per Drg 24 292) weld the top mounting pads to the original kickboard and fit the single Gusset per **Views X-1 & X-2**. If the inner pad cannot be welded to the landing mounting plate bolted to the outer wall of the original top access ladder (eg because there is a gap) modify the pad and/or bridge the gap with a gusset to suit as shown in **View X-2**

# FOLDING STAIRWAY
## Komatsu PC3000 Excavator

## Section 1 Installation Instructions - Fixed Stair Mounting Pad 24291

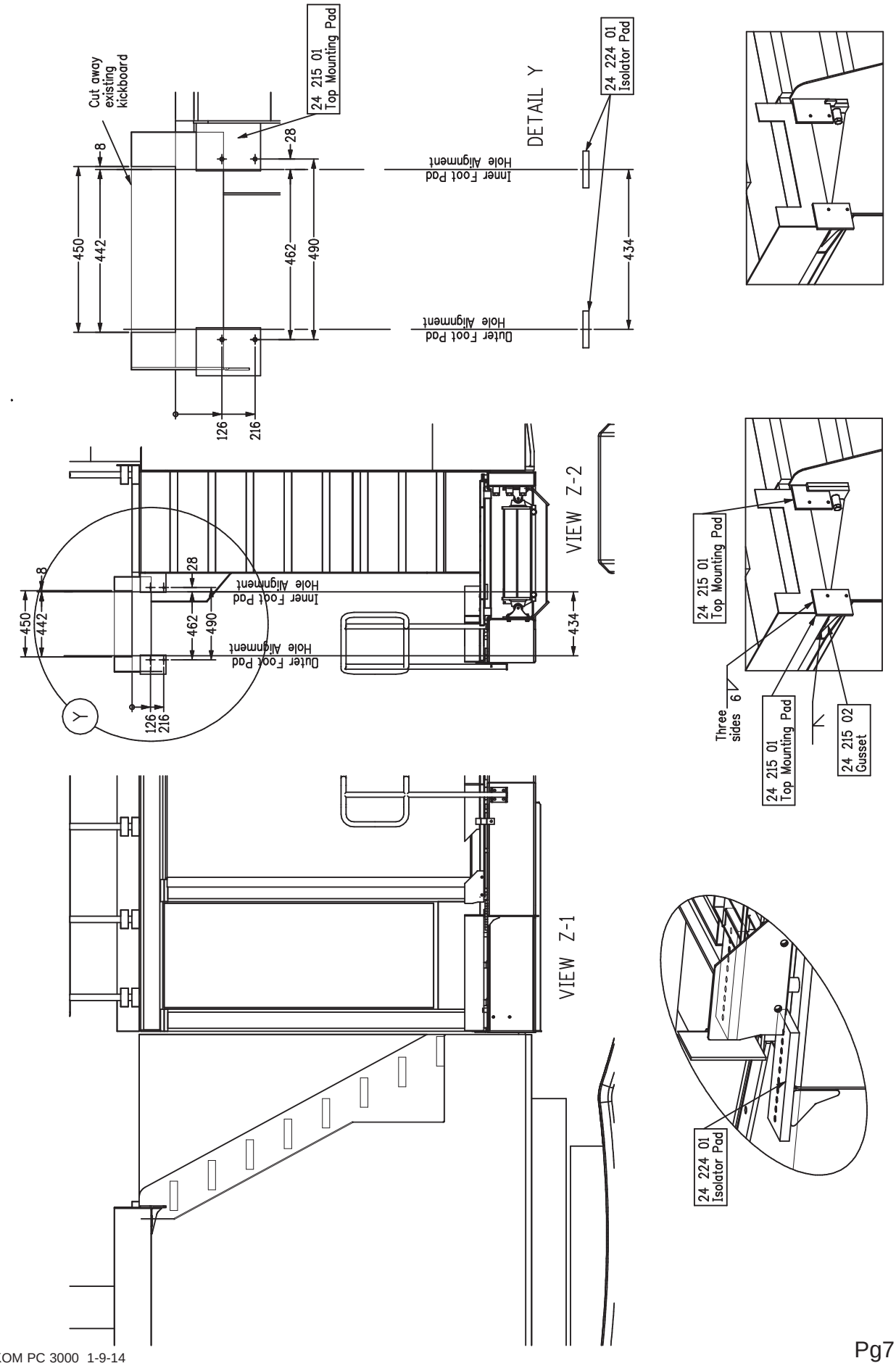

# FOLDING STAIRWAY
## Komatsu PC3000 Excavator

## Section 1 Installation Instruction Drawings
### Structural Reinforcements - 24288
See Page 9

**NOTE**
**Follow all on-site/Mine lifting and safety procedures when installing Power Step Stairway to Excavator.**

**PROCEDURE**

1. Remove the OEM battery box from the excavator.

2. Fit the Bolthole Template to the machine using the tapped holes used by the original battery box bolts. Fit extension pieces to the original bolting flanges using the template to establish their positions. Two types are supplied in the kit:
- 24 247 04, cut to size for use if all dimensions are correct and - 24 247 05, from which extensions can be made to suit. See **View Z**.

3. Fit Reinforcement Web, Reinforcement Flange and Gusset to the beam behind the bolting flange, as shown **Views Y-1 and Y-2**.
The order in which these tasks are undertaken can be varied to suit circumstances at the time.

NOTE THAT access to the rearmost of the two beams involved will be restricted for this work if the counterweight is fitted at the back of the excavator. In this case, reduce the width of the reinforcement flange which is to be fitted beneath this beam from 150 to 110mm and fit it to one side of the beam. Attach it to the beam with a fillet weld on the rearmost side instead of a butt weld. The reinforcement web should still be central under the beam, not central with the added flange.

Welding:
Cat SP to AS1554 unless specifically directed otherwise 8 cfw uno.
Use safe lifting and working procedures at all times.

# FOLDING STAIRWAY
## Komatsu PC3000 Excavator

## Section 1 Installation Instruction Drawings
### Structural Reinforcements - 24288

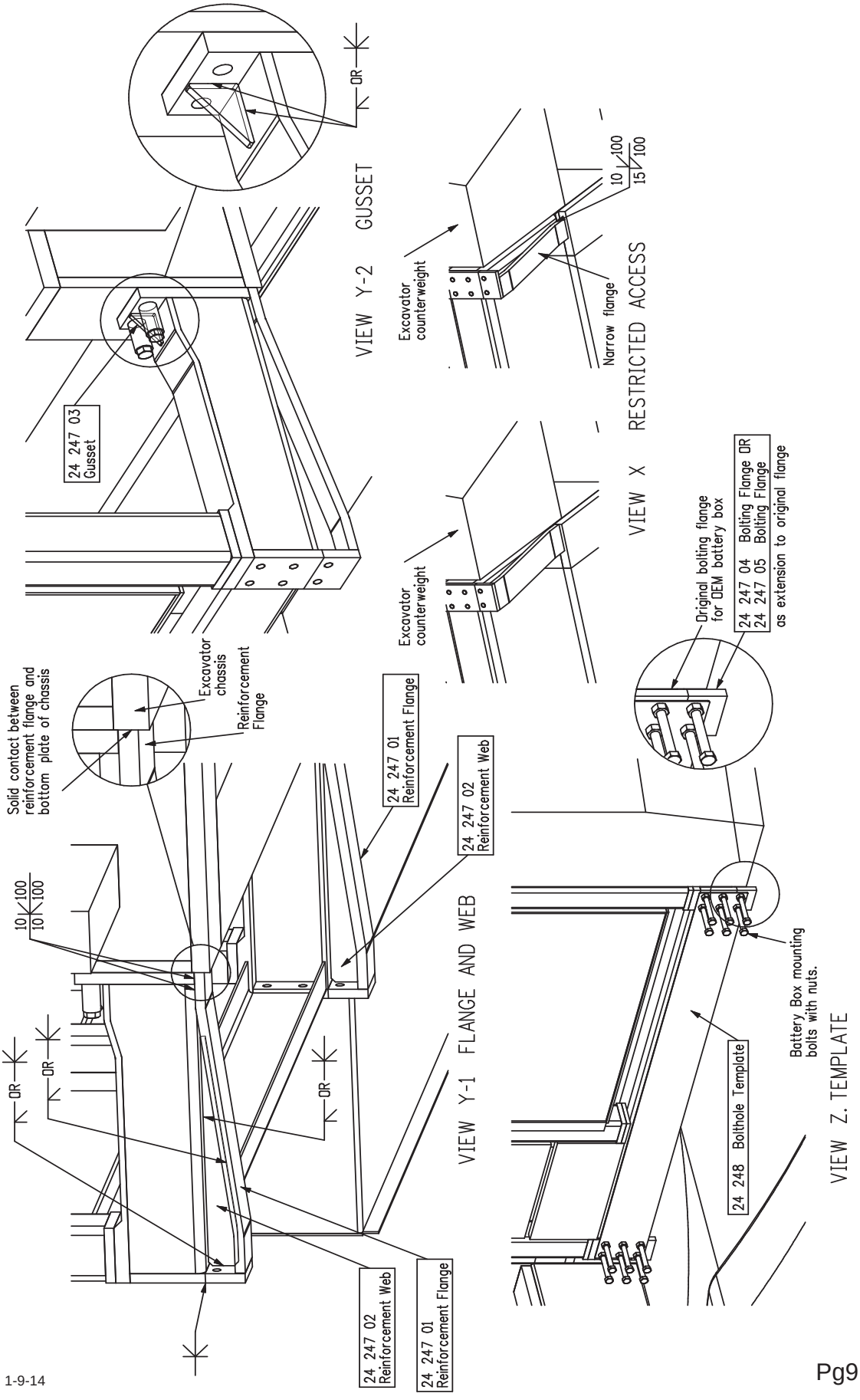

# FOLDING STAIRWAY
## Komatsu PC3000 Excavator

## Section1 Installation and Mounting Instructions PS-24292
**Fixed Stair**

**NOTE**
**Follow all on-site/Mine lifting and safety procedures when installing Power Step Stairway to Excavator.**

PROCEDURE.

1. Fit the top of the fixed top stair to the Mounting Pads on the top landing kickboard per drg 24 291, taking care not to overload their temporary welds.

2. Adjust the mounting components at the bottom of the stair to make the stair incline at 45deg. The bottom of the stair can be raised/lowered by adding/removing Isolator Spacers from underneath the mounting isolators or if necessary by drilling new holes in the Bottom Mounting or the mounting stub attached beneath the stair stiles.

3. Adjust the longways position of the bottom stair mounting by making use of the multiple boltholes in the isolator pad on top of the battery box and/or the slotted holes in the Bottom Mounting.

4. Remove the stair, finish welding the top mounting pads and permanently refit the stairs and handrails.

5. Trim/alter to suit the kickboards in the vicinity of the bottom mountings.

6. Trim/remodel the cabin landing handrail to suit.

7. Fit a handrail or barrier to suit beneath the fixed stairs.

Use safe handling and lifting procedures at all times.

# FOLDING STAIRWAY
## Komatsu PC3000 Excavator

## Section1 Installation and Mounting Instructions PS-24292
### Fixed Stair

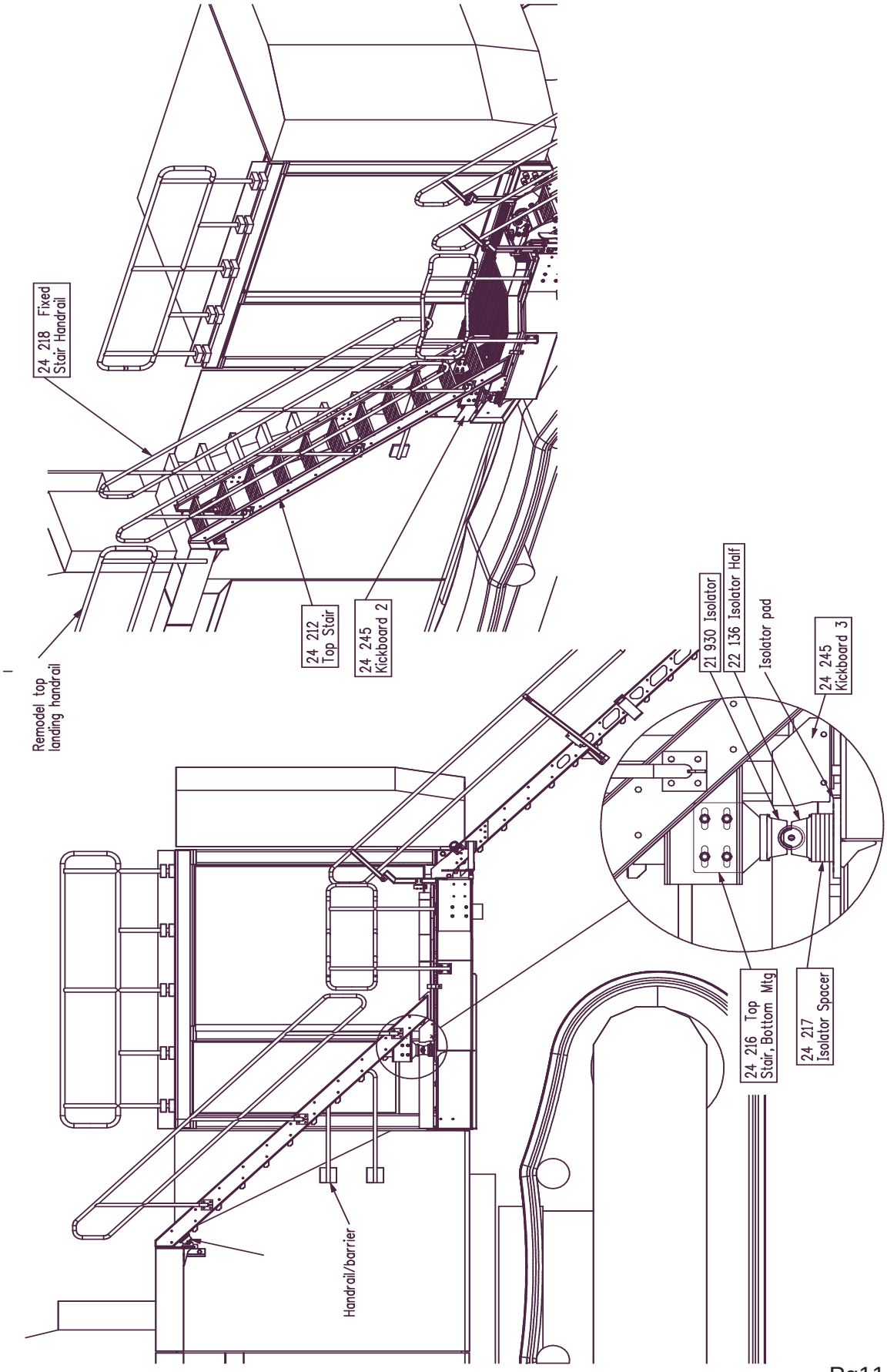

# FOLDING STAIRWAY
## Komatsu PC3000 Excavator

## Section1 Installation and Mounting Instructions PS-24286
**Latch Adjustment**

**NOTE**
**Follow all on-site/Mine lifting and safety procedures when installing Power Step Stairway to Excavator.**

**ADJUSTMENT NOTES.**
See Dwg. Pg. 11

1. With the stair raised to latching position or nearly in latching position (and therefore the landing support isolators deformed as they will be when the stair is stowed) adjust the position of the latch assembly to the dimensions given in **Views Z.1 & Z.2 and Y.1**

2. Adjust the fitment of the Catch to the Catch Pivot so the rubber pad inside the Catch is 300mm from the Latch Base Plate when the Catch is approximately horizontal. Per **Views Y.1 and Y.2**

3. Adjust the position of the top catch buffer and/or trim the buffer so the catch can rise to the extent of metal to metal interference with the top plate of the latch body, while compressing the buffer by 2mm approx.

4. Adjust the back buffers so that the catch can fall to the position shown in **View Y.1** with spring loading applied.

5. Adjust the latch release mechanism so the catch will rise to the position given in iii. above under the action of the latch release cylinder.

6. Check that the latch will catch and secure the stair when it rises to the full extent of its' travel, will release when required and that there is sufficient range in the various adjustements for in-service variations and movements to occur.

# FOLDING STAIRWAY
## Komatsu PC3000 Excavator

## Section 1 Installation Instruction Drawings - PS-24286
### Latch Adjustment

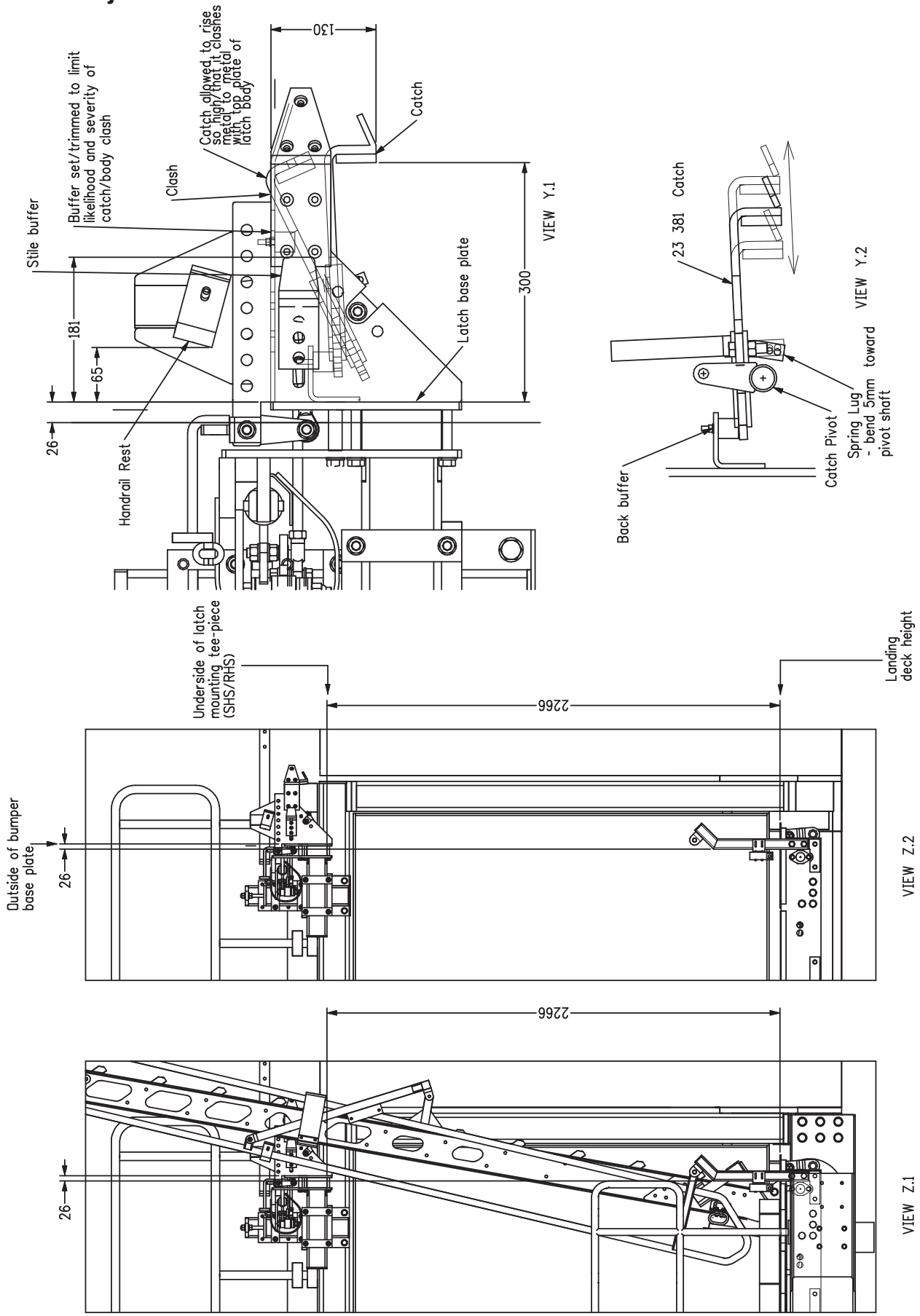

# FOLDING STAIRWAY
## Komatsu PC3000 Excavator

## Section 2 Recommended Maintenance Procedure

**Daily**

**Visually check stairway and structure for damage, loose components, handrails, etc.**

**Check for hydraulic oil leaks from hydraulic cylinders, plumbing and hoses.**

**Check all rubber stops**

**Notify the appropriate supervisor for any observed damage or malfunction.**

**500 Hours**

Grease all grease nipples. Lower or raise stairway for accessibility.

Check main mounting bolts for torque.

Check hydraulic oil level in power pack and top up as necessary. (Stairway in raised position).

Top up using same hydraulic oil as used in hydraulics of machine.
Thoroughly check all electrical wiring for damage, replace as necessary.

**Repeat daily check as above.**

**5000 Hours**

Change hydraulic oil in tank of hydraulic power pack (10.0 litres).

It is recommended that the same hydraulic oil be used in the power pack as the hydraulics of the machine.

Grease all grease nipples. Lower or raise stairway for accessibility.

Retorque all main mounting bolts

**Repeat daily check as above.**

# FOLDING STAIRWAY
## Komatsu PC3000 Excavator

## Section 3 Operating Procedure

**To Lower Stairway** (from the machine)

Position excavator in a level, safe area, away from the work face, whenever possible.
Position the excavator body square to the tracks, lower bucket, apply park brake and lower engine speed to idle.
Descend stairway behind cabin to lower walkway.
Check that the area below and behind the Folding Stairway is clear of people and obstacles, and lower stairway by operating the two position electrical switch adjacent to the stairway, to the down position by pressing the switch down.
Hold the switch in the down position until stairway is fully extended and lowered.
If the Excavator is parked on uneven ground, the bottom of the stairway may touch the ground before the Stairway is in the fully extended and lowered position.
Should this occur, descend the stairway with caution.
Bottom of stairway is designed to rest on the ground in the fully lowered and extended position, but can be used in the fully lowered position without resting on the ground.

**To Raise Stairway**

Ascend the stairway onto the lower walkway of the Excavator
Ensure the area around the stairway is clear of people and standing to the side, clear of the area the handrails and stairway will rise up to, operate the electrical switch to the raise position (up).
Hold the switch in the up position until the stairway is in the fully raised position and is secured correctly by the Latch Acutator.

The stairway is now raised and stored.

**OPERATING NOTES**

**NOTE: FLOW CONTROL VALVE ADJUSTMENT:**
The valve should be positioned to restrict the flow and speed of the Power Step when lowering. Adjust the knob on top of the valve by turning left or right (clockwise) when the step is being lowered, until it is lowering at a safe and reasonable speed.

When it is adjusted, lock the adjusting knob by tightening the grub screw located on the side of the knob.

**NOTE: MAGNETIC 'GO' SWITCH ADJUSTMENT:**
The switch target trigger area is located on the opposite side and end from the cable entry point on the switch. Once it is mounted to the switch bracket, adjust the switch in or out from the stair steel trigger point, to be within 3mm - 10mm from touching each other when the stair is in the desired rest position.
[DO NOT EXCEED 10MM DISTANCE BETWEEN THE SWITCH AND STRIKER PLATE].
Test by raising and lowering the Power Step a couple of times and adjust again if necessary.

# FOLDING STAIRWAY
## Komatsu PC3000 Excavator

## Section 4 Assembly Complete

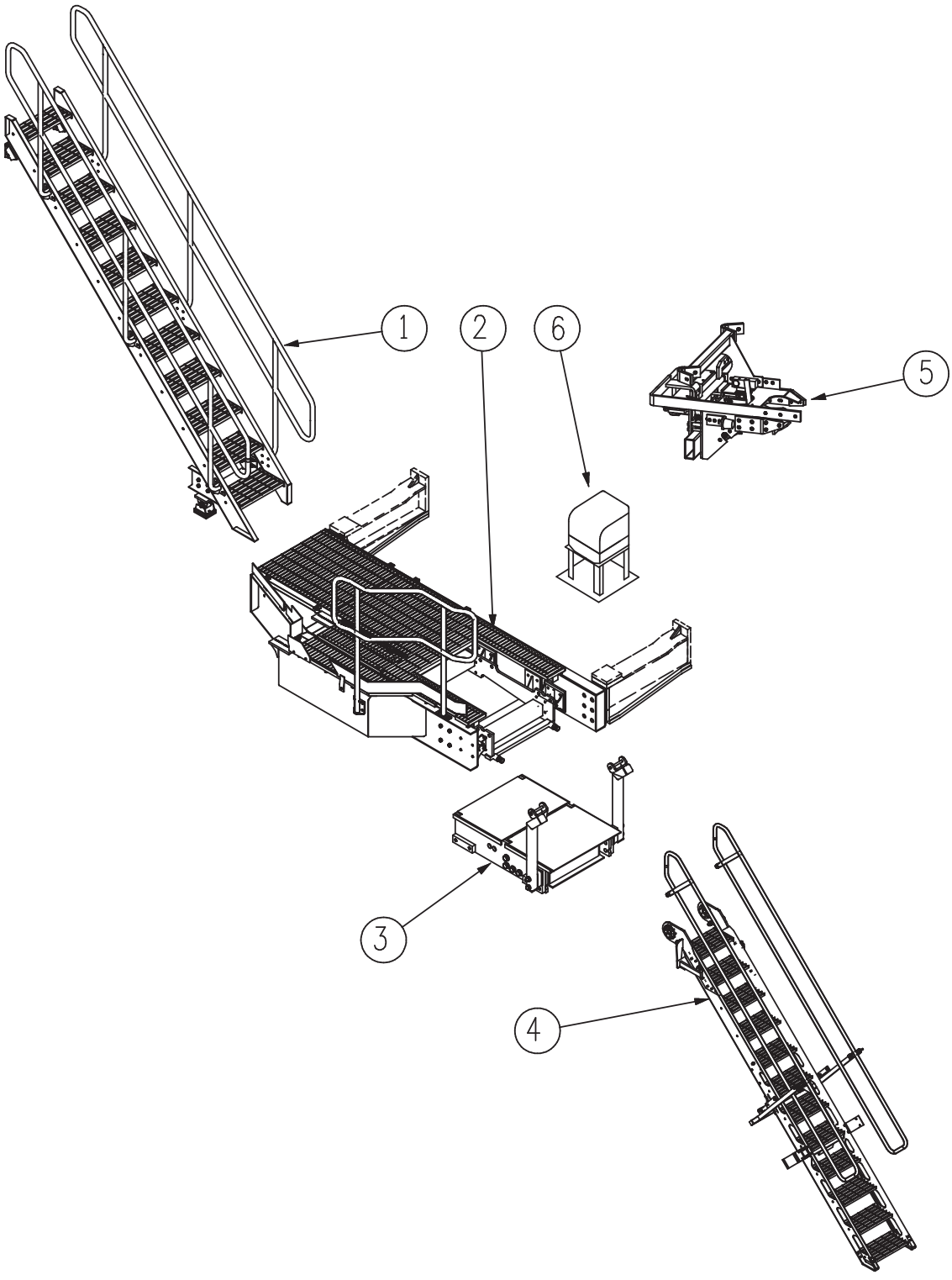

# FOLDING STAIRWAY
## Komatsu PC3000 Excavator

## Section 4-1 Fixed Stair Assembly PS-24212-A

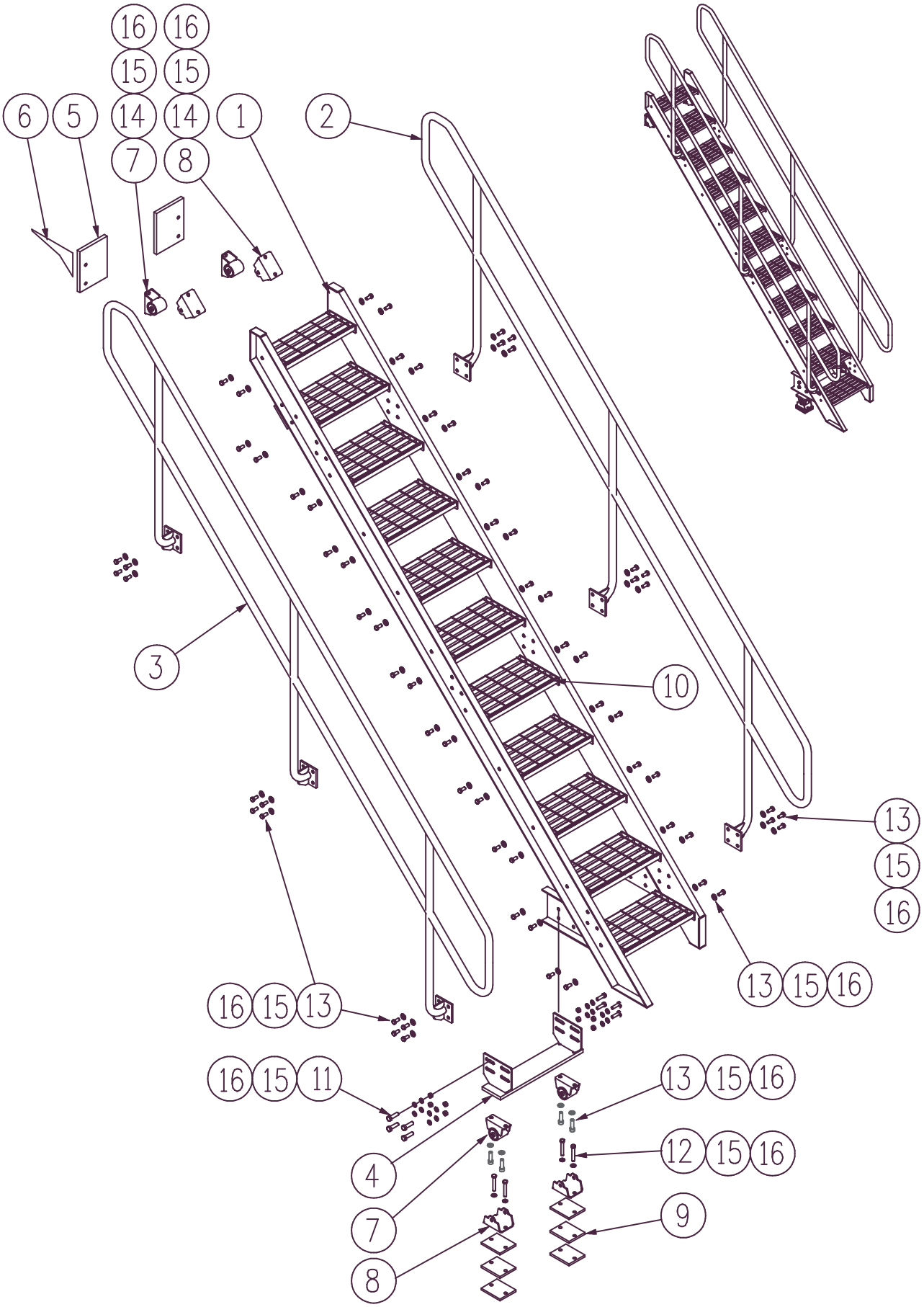

# FOLDING STAIRWAY
## Komatsu PC3000 Excavator

## Section 4-1 Fixed Stair Assembly PS-24212-A

| Item | Part No. | Part Name | Qty | | |
|---|---|---|---|---|---|
| 1 | PS-24212 | TOP STAIR FABRICATION | 1 | | |
| 2 | PS-24218-R | FIXED STAIR HANDRAIL- RH | 1 | | |
| 3 | PS-24218-L | FIXED STAIR HANDRAIL- LH | 1 | | |
| 4 | PS-24216 | TOP STAIR BOTTOM MOUNTING | 1 | | |
| 5 | PS-23215-01 | TOP MOUNTING PAD | 1 | | |
| 6 | PS-23215-02 | TOP MOUNTING PAD GUSSET | 1 | | |
| 7 | PS-21930A | ISOLATOR ASSEMBLY | 4 | | |
| 8 | PS-22136 | ISOLATOR MOUNTING | 4 | | |
| 9 | PS-23217 | ISOLATOR SPACER (alum) | 18 | | |
| 10 | PS-32266-SAN-B/Y | NON-SLIP NOSING (BLACK/YELLOW) | 11 | | |
| 11 | CPS-M12X40ZP | BOLT-M12 x 40 | 8 | | |
| 12 | CPS-M12X75ZP | BOLT-M12 x 75 | 4 | | |
| 13 | CPS-M12X35ZP | BOLT-M12 x 35 | 68 | | |
| 14 | CPS-M12X25ZP | BOLT-M12 x 25 | 12 | | |
| 15 | CPS-M12NZP | NUT-M12 | 76 | | |
| 16 | CPS-M12WH | WASHER-HARDENED-M12 | 160 | | |

# FOLDING STAIRWAY
## Komatsu PC3000 Excavator

## Section 4-2 Landing Assembly - Battery Box PS-24236-A

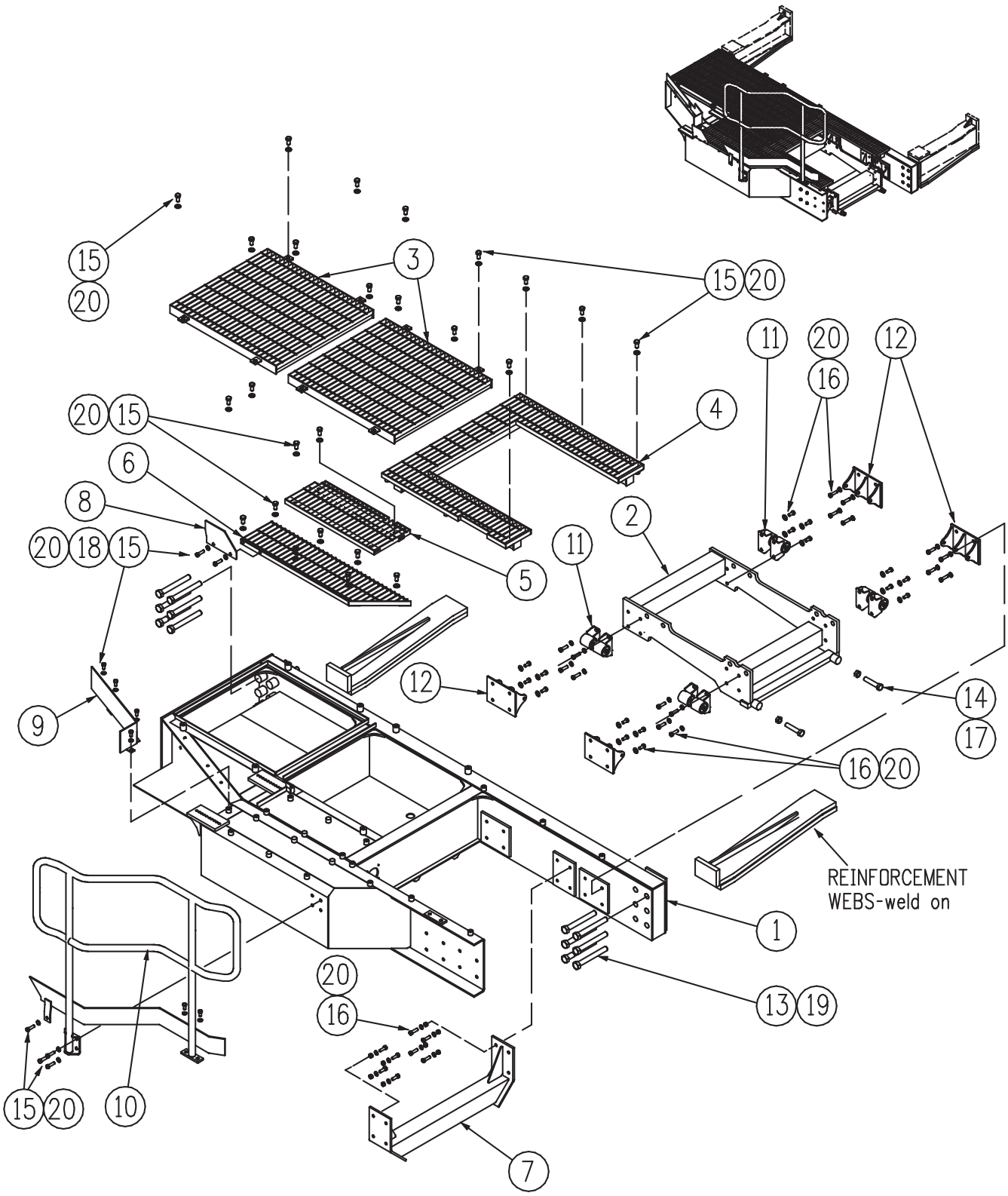

# FOLDING STAIRWAY
## Komatsu PC3000 Excavator

## Section 4-2 Landing Assembly - Battery Box PS- 24236-A

See Drawing Pg.19

| Item | Part No. | Part Name | Qty | | |
|---|---|---|---|---|---|
| 1 | PS-24236 | BATTERY BOX FABRICATION | 1 | | |
| 2 | PS-24243 | STAIR LANDING MOUNTING FRAME | 1 | | |
| 3 | PS-24238 | BATTERY HATCH LID | 2 | | |
| 4 | PS-24242 | FLOOR PANEL 2 | 1 | | |
| 5 | PS-24240 | FLOOR PANEL 3 | 1 | | |
| 6 | PS-24241 | FLOOR PANEL 4 | 1 | | |
| 7 | PS-24249 | ROTATION SPREADER | 1 | | |
| 8 | PS-24287 | KICKBOARD 1 | 1 | | |
| 9 | PS-24245 | KICKBOARD 2 | 1 | | |
| 10 | PS-24226 | HANDRAILS | 1 | | |
| 11 | PS-21930A | ISOLATOR ASSEMBLY | 8 | | |
| 12 | PS-24246 | ISOLATOR HAND | 4 | | |
| 13 | PS-M24X200ZP | MOUNTING BOLTS M24 x 200 | 12 | | |
| 14 | CPS-M20X75ZP | BOLT-M20 x 75 | 2 | | |
| 15 | CPS-M12X30ZP | BOLT-M12 x 30 | 34 | | |
| 16 | CPS-M12X25ZP | BOLT-M12 x 25 | 42 | | |
| 17 | CPS-M20NZP | NUT-M20 | 2 | | |
| 18 | CPS-M12NZP | NUT-M12 | 11 | | |
| 19 | CPS-M24WH | WASHER-HARDENED-M24 | 12 | | |
| 20 | CPS-M12WH | WASHER-HARDENED-M12 | 87 | | |

# FOLDING STAIRWAY
## Komatsu PC3000 Excavator

## Section 4-3 Stair Box Landing Assembly PS-22827-A

See Parts List pg. 22

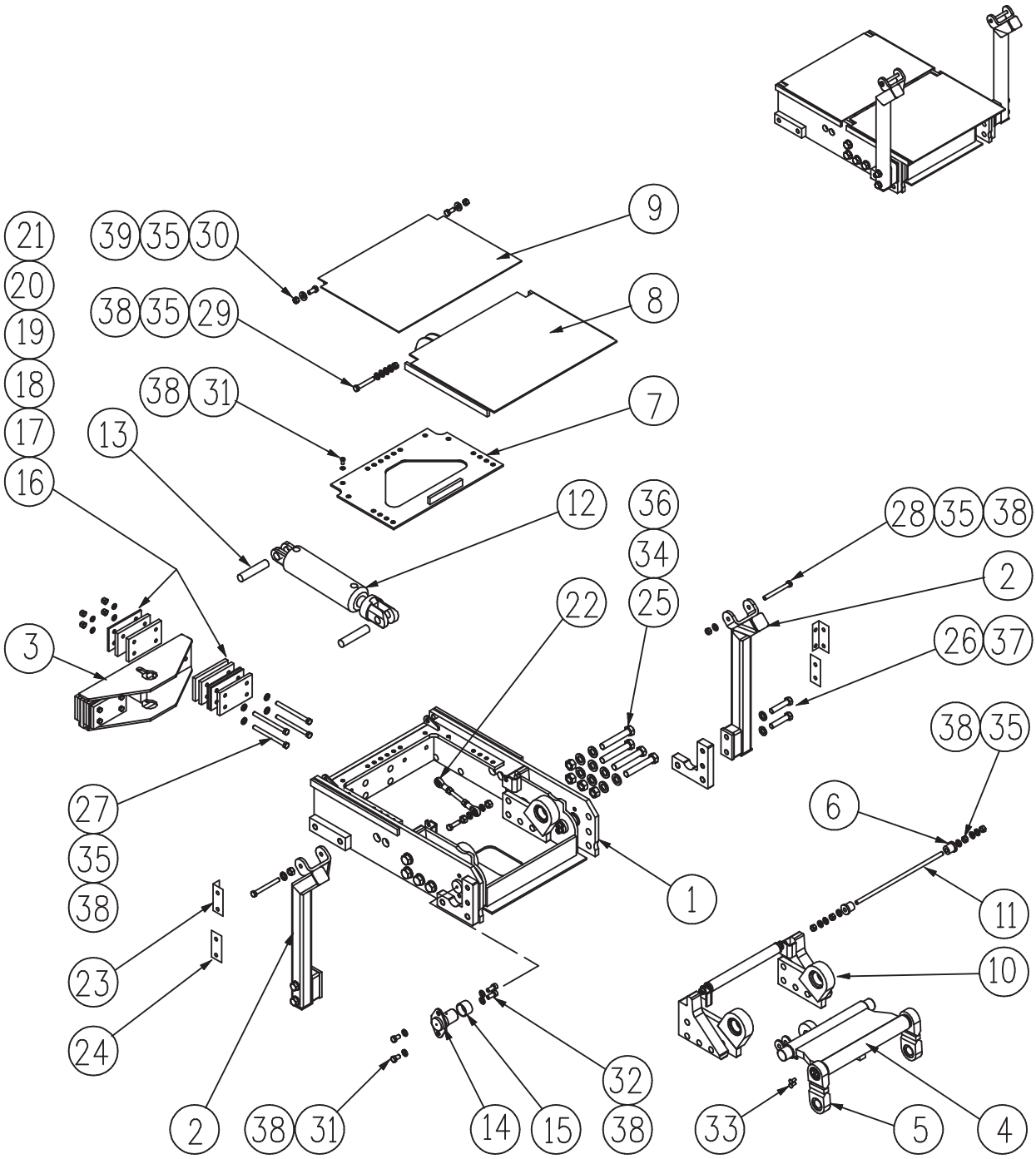

# FOLDING STAIRWAY
## Komatsu PC3000 Excavator

## Section 4-3 Stair Box Landing Assembly PS-22827-A

| Item | Part No. | Part Name | Qty | | |
|---|---|---|---|---|---|
| 1 | PS-22827 | LANDING FABRICATION | 1 | | |
| 2 | PS-22891 | HANDRAIL POST | 2 | | |
| 3 | PS-22892 | ACTUATOR CYLINDER MOUNTING | 1 | | |
| 4 | PS-22825 | BELL CRANK | 1 | | |
| 5 | PS-22824 | LIFTING LINK | 2 | | |
| 6 | PS-S245 | BUSH-RUBBER-S245 | 2 | | |
| 7 | PS-22818 99 | BRACE | 1 | | |
| 8 | PS-22814 | FRONT LID | 1 | | |
| 9 | PS-22815 | BACK LID | 1 | | |
| 10 | PS-22820 99 | BEARING ASSEMBLY | 2 | | |
| 11 | PS-22821 99 | LID HINGE SHAFT | 1 | | |
| 12 | PS-63019-A | HYDRAULIC CYLINDER | 1 | | |
| 13 | PS-63019P | CYLINDER PIN | 2 | | |
| 14 | PS-22809 99 | HINGE PIN | 2 | | |
| 15 | PS-22809 09 | HINGE PIN CAP | 2 | | |
| 16 | PS-22892 07 | BUFFER PAD-150 x 90 x 12thk (Alum.) | 8 | | |
| 17 | PS-22892 08 | CLAMP PAD-150 x 90 x 12mm Pl | 2 | | |
| 18 | PS-22892 09 | SPACER PAD-Type 1 - 150 x 90 x 1mm | 4 | | |
| 19 | PS-22892 10 | SPACER PAD-Type 2 - 150 x 90 x2mm | 4 | | |
| 20 | PS-22892 11 | SPACER PAD-Type 3 - 1mm Pl. 150 x 90 | 2 | | |
| 21 | PS-22892 16 | SPACER PAD-Type 4 - 150x 90 x 12mm(Alum.) | 8 | | |
| 22 | PS-22826 | LID CONTROL LINK ASSEMBLY | 1 | | |
| 23 | PS-22838-01 | SWITCH MOUNTING | 2 | | |
| 24 | PS-22838-02 | SWITCH NUT PLATE | 2 | | |
| 25 | CPS-M20X120ZP | BOLT-M20 x 120 | 8 | | |
| 26 | CPS-M16X120ZP | BOLT-M16 x 120 | 4 | | |
| 27 | CPS-M12X130ZP | BOLT-M12 x 130 | 8 | | |
| 28 | CPS-M12X120ZP | BOLT-M12 x 120 | 2 | | |
| 29 | CPS-M12X75ZP | BOLT-M12 x 75 | 2 | | |
| 30 | CPS-M12X30ZP | BOLT M12 x 30 Cap/Hd. | 2 | | |
| 31 | CPS-M12X20ZP | BOLT-M12 x 20 | 4 | | |
| 32 | CPS-M12X20ZP | BOLT- CAP-M12 x 25 | 4 | | |
| 33 | CPS-M8X12ZP | BOLT-M8 x 12 C/S Hd. | 4 | | |
| 34 | CPS-M20NZP | NUT-M20 | 8 | | |
| 35 | CPS-M12NZP | NUT-M12 | 8 | | |
| 36 | CPS-M20WH | WASHER-HARDENED-M20 | 16 | | |
| 37 | CPS-M16WH | WASHER-HARDENED-M16 | 4 | | |
| 38 | CPS-M12WH | WASHER-HARDENED-M12 | 32 | | |
| 39 | CPS-M12WH | WASHER-HARDENED Spring- M12 | 2 | | |

# FOLDING STAIRWAY
## Komatsu PC3000 Excavator

## Section 4-4 Stair Assembly - Box Landing Stair PS-22810A

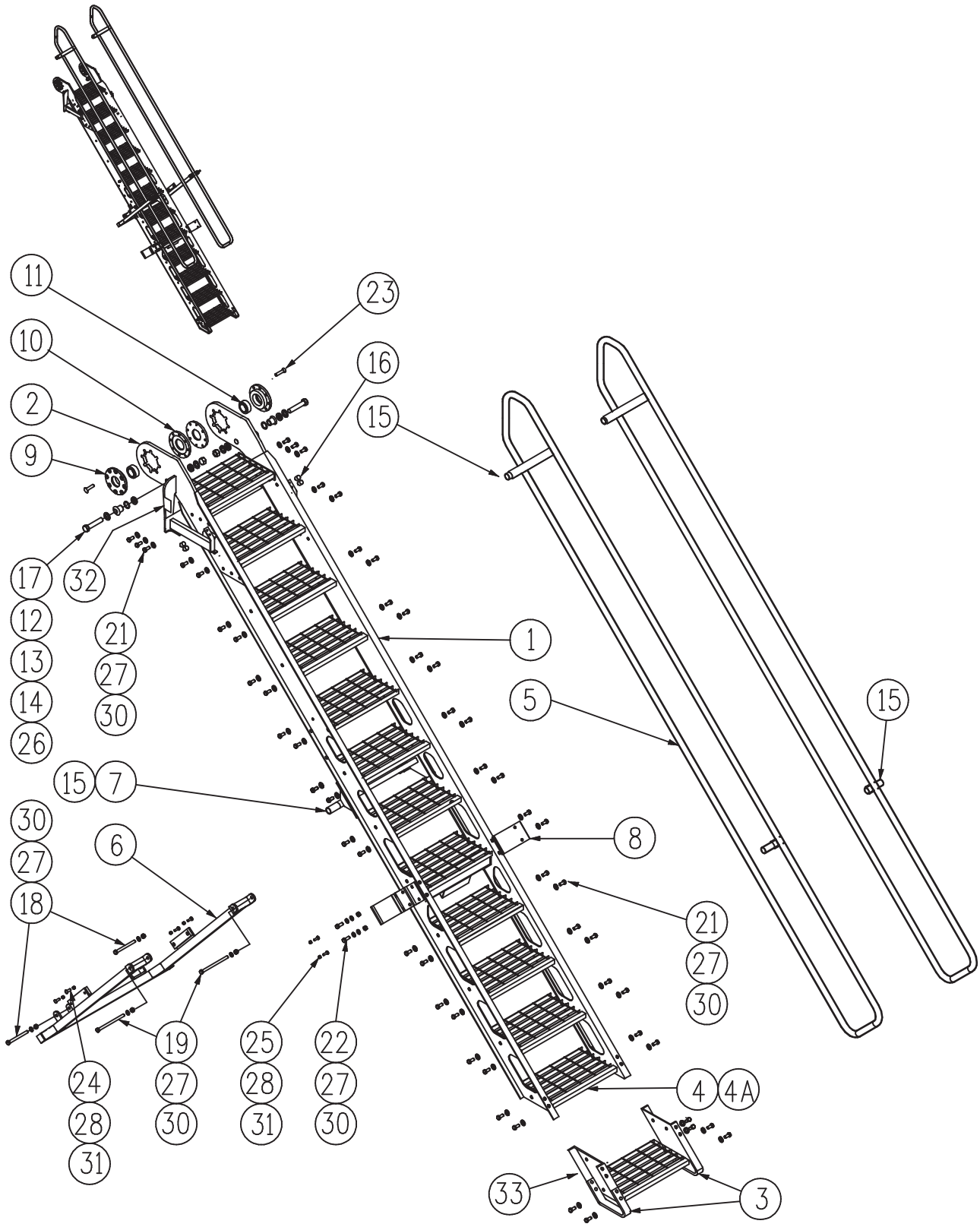

# FOLDING STAIRWAY
## Komatsu PC3000 Excavator

## Section 4-4 Stair Assembly Box Landing Stair PS-22810A

See Drawing Page 23

| Item | Part No. | Part Name | Qty | | |
|---|---|---|---|---|---|
| 1 | PS-22810 | STAIR (Stiles 12 Tread) | 1 | | |
| 2 | PS-22806 | STILE HEAD | 2 | | |
| 3 | PS-22802 | STILE FOOT | 2 | | |
| 4 | PS-22805 | STAIR TREADS | 13 | | |
| 4A | PS-32266-SAN | NON SLIP NOSING | 13 | | |
| 5 | PS-22889 | HANDRAIL | 2 | | |
| 6 | PS-22890 | HANDRAIL LINK | 2 | | |
| 7 | PS-22804 | HANDRAIL LINK MOUNTING | 1 | | |
| 8 | PS-22888 | HANDRAIL HOOK | 2 | | |
| 9 | PS-22809 01 | HINGE BEARING FLANGE OUTER | 2 | | |
| 10 | PS-22809 02 | HINGE BEARING FLANGE INNER | 2 | | |
| 11 | PS-GE-40ES | HINGE BEARING SKF GE 40 ES | 2 | | |
| 12 | PS-22809 05 | LINK STUB | 2 | | |
| 13 | PS-22809 06 | SPECIAL WASHER 36dia x 7 | 4 | | |
| 14 | PS-22809 07 | CRUSH WASHER 36dia x 2.75 Nylon | 4 | | |
| 15 | PS-S245 | BUSH | 12 | | |
| 16 | PS-40006 | BUMPER RUBBER | 4 | | |
| 17 | CPS-M20X100ZP | BOLT-M20 x 100 - link stub bolt | 2 | | |
| 18 | CPS-M20X150ZP | BOLT-M12 x 150 | 2 | | |
| 19 | CPS-M20X120ZP | BOLT-M12 x 120 | 2 | | |
| 20 | CPS-M12X50ZP | BOLT-M12 x 50 | 10 | | |
| 21 | CPS-M12X45ZP | BOLT-M12 x 45 | 68 | | |
| 22 | CPS-M12X25ZP | BOLT-M12 x 25 | 4 | | |
| 23 | CPS-M10X35ZP | BOLT-M10 x 35 c-sunk socket hd. | 16 | | |
| 24 | CPS-M8X25SK | BOLT-M8 x 25 c-sunk socket hd. | 4 | | |
| 25 | CPS-M8X12ZP | BOLT-M8 x 12 pan hd. | 8 | | |
| 26 | CPS-M20NZP | NUT-M20 | 2 | | |
| 27 | CPS-M12NZP | NUT-M12 | 86 | | |
| 28 | CPS-M8NZP | NUT-M8 | 8 | | |
| 29 | CPS-M20WH | WASHER-HARDENED-M20 | 4 | | |
| 30 | CPS-M12WH | WASHER-HARDENED-M12 | 172 | | |
| 31 | CPS-M8WH | WASHER-HARDENED-M8 | 16 | | |
| 32 | PS-22838-03 | GO SWITCH STRIKER | 2 | | |
| 33 | PS-22837 | STAIR EXTENSION | 2 | | 1 LH & 1 RH |

# FOLDING STAIRWAY
## Komatsu PC3000 Excavator

## Section 4-5 Latch Mounting Assembly PS- 24283

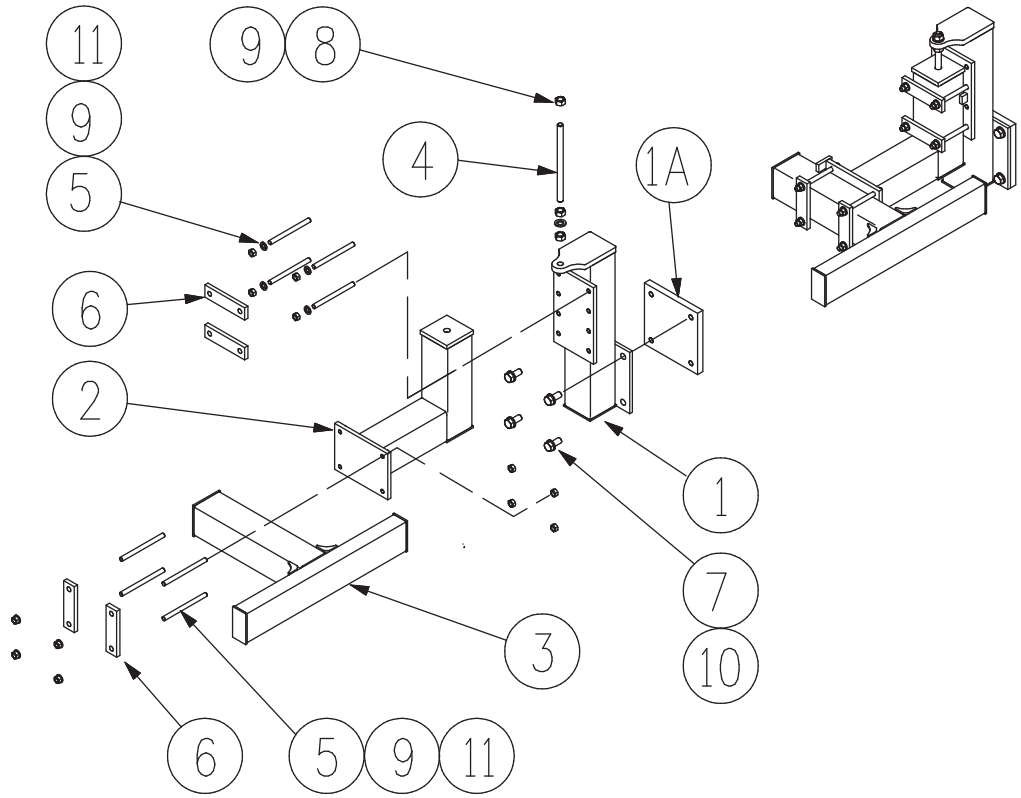


| Item | Part No. | Part Name | Qty | | |
|---|---|---|---|---|---|
| 1 | PS-24278 | LATCH MOUNTING POST | 1 | | |
| 1A | PS-24278-07 | LATCH BOLTING PAD | 1 | | |
| 2 | PS-24279 | LATCH MOUNTING ELBOW | 1 | | |
| 3 | PS-24280 | LATCH MOUNTING TEE | 1 | | |
| 4 | PS-24281-03 | JACK BOLT-THREADED ROD-M16 x 250Lg | 1 | | |
| 5 | PS-24281-02 | CLAMP BOLT-THREADED ROD-M12 x 150Lg | 8 | | |
| 6 | PS-24281-01 | CLAMP BAR | 4 | | |
| 7 | CPS-M16X25ZP | BOLT-M16 x 25 | 4 | | |
| 8 | CPS-M16NZP | NUT-M16 | 2 | | |
| 9 | CPS-M12NZP | NUT-M12 | 8 | | |
| 10 | CPS-M16WH | WASHER-HARDENED-M16 | 6 | | |
| 11 | CPS-M12WH | WASHER-HARDENED-M12 | 8 | | |

# FOLDING STAIRWAY
## Komatsu PC3000 Excavator

## Section 4-6 Latch Assembly PS-23383A

See Parts List Pg 27,28

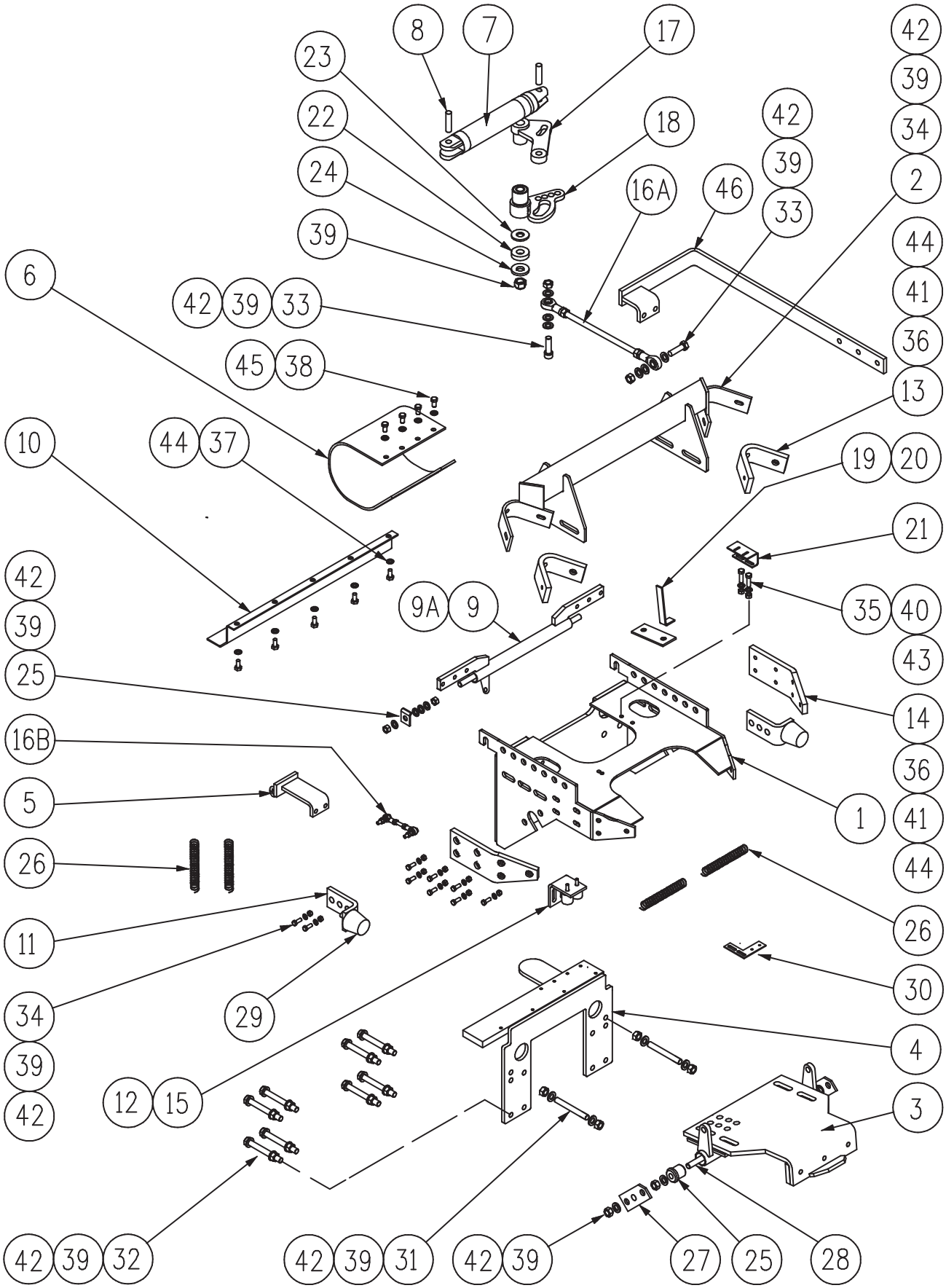

# FOLDING STAIRWAY
## Komatsu PC3000 Excavator

## Section 4-6 Latch Assembly PS-23383A-PC3000

See Drawing page 26

| Item | Part No. | Part Name | Qty | | |
|---|---|---|---|---|---|
| 1 | PS-23383 | BUMPER BASE FABRICATION | 1 | | |
| 2 | PS-24277 | RAISED HANDRAIL REST | 1 | | |
| 3 | PS-23847 | CATCH HOOK FABRICATION | 1 | | |
| 4 | PS-22851 | LATCH ACTUATOR BASE | 1 | | |
| 5 | PS-24276-98 | MOUNTING LANYARD LEVER | 1 | | |
| 6 | PS-22853 | LATCH ACTUATOR SHROUD | 1 | | |
| 7 | PS-62997 | CYLINDER | 1 | | see pg. 29 |
| 8 | PS-62997P | CYLINDER PIN | 2 | | see pg. 29 |
| 9 | PS-22849 | LANYARD LEVER SHAFT | 1 | | |
| 9A | PS-22849-02 | PIVOT SHAFT | 1 | | |
| 10 | PS-22851-06 | COVER PLATE | 1 | | |
| 11 | PS-22844-02 | STILE BUFFER BRACKET | 1 | | |
| 12 | PS-40006 | BUFFER-RUBBER-M6 (Mackay) | 2 | | |
| 13 | PS-22848-01 | LATCH AND HANDRAIL GUIDE PAD(Rubber) | 2 | | |
| 14 | PS-22848-02 | BUMPER PAD | 2 | | |
| 15 | PS-22844-01 | LATCH STOP BRACKET | 2 | | |
| 16A | PS-22852-97 | LINKAGE ASSEMBLY (12mm rod x 270) | 1 | | |
| 16B | PS-22849-99 | LINKAGE ASSEMBLY (12mm rod x 90) | 1 | | |
| 17 | PS-22852-99 | LEVER BRACKET ASSEMBLY | 2 | | |
| 18 | PS-22852-98 | SECTOR BRACKET ASSEMBLY | 1 | | |
| 19 | PS-22846-99 | SWITCH STRIKER | 1 | | |
| 20 | PS-22846-02 | CATCH PLATE FLANGE | 1 | | |
| 21 | PS-22894 | GO SWITCH BRACKET | 1 | | |
| 22 | PS-22852-10 | REINFORCED RUBBER ”SPRING” | 1 | | |
| 23 | PS-22852-09 | SPACER | 1 | | |
| 24 | PS-22852-11 | WASHER | 2 | | |
| 25 | PS-S245 | BUSH | 4 | | |
| 26 | PS-39009 | LATCH SPRING | 4 | | |
| 27 | PS-22844-05 | LATCH MOUNTING BAR | 2 | | |
| 28 | PS-22847-02 | LATCH PIVOT SHAFT | 1 | | |
| 29 | PS-40003 | STILE BUFFER-Insul-8 50-77925 | 2 | | |
| 30 | PS-22893-02 | SWITCH MOUNTING | 1 | | |
| 31 | CPS-M12X100 | THREADED ROD M12 x 100 | 2 | | |
| 32 | CPS-M12X100ZP | BOLT-M12 x 100 | 8 | | |
| 33 | CPS-M12X50ZP | BOLT-M12 x 50 | 2 | | |

# FOLDING STAIRWAY
## Komatsu PC3000 Excavator

## Section 4-6 Latch Assembly PS-23383A-PC3000

See Drawing page 26

| Item | Part No. | Part Name | Qty | | |
|---|---|---|---|---|---|
| 34 | CPS-M12X35ZP | BOLT-M12 x 35 | 8 | | |
| 35 | CPS-M10X30ZP | BOLT-M10 x 30 | 6 | | |
| 36 | CPS-M8X20ZP | BOLT-M8 x 20-Pan Hd. Socket screw | 20 | | |
| 37 | CPS-M8X15ZP | BOLT-M8 x 15 Socket Hd. | 5 | | |
| 38 | CPS-M6X15NZP | BOLT-M6 x 15 | 8 | | |
| 39 | CPS-M12NZP | NUT-M12 | 20 | | |
| 40 | CPS-M10NZP | NUT-M10 | 4 | | |
| 41 | CPS-M8NN | NUT-NYLOC-M8 | 20 | | |
| 42 | CPS-M12WH | WASHER-HARDENED-M12 | 40 | | |
| 43 | CPS-M10WH | WASHER-HARDENED-M10 | 4 | | |
| 44 | CPS-M8WH | WASHER-HARDENED-M8 | 45 | | |
| 45 | CPS-M8WH | WASHER-HARDENED-M6 | 8 | | |
| 46 | PS-24276-99 | LANYARD LEVER | 1 | | |

### EMERGENCY LANYARD ASSEMBLY PS-24294

1. Lanyard Tube
2. Steel Wire
3. Thimble x2
4. Swage x2

# FOLDING STAIRWAY
## Komatsu PC3000 Excavator

## Section 4-7 Hydraulic Cylinder Assembly

### Cylinder (Stair)

PS-63019-AH
Cyl & Hyd Kit
Hoses & extra fittings not Included

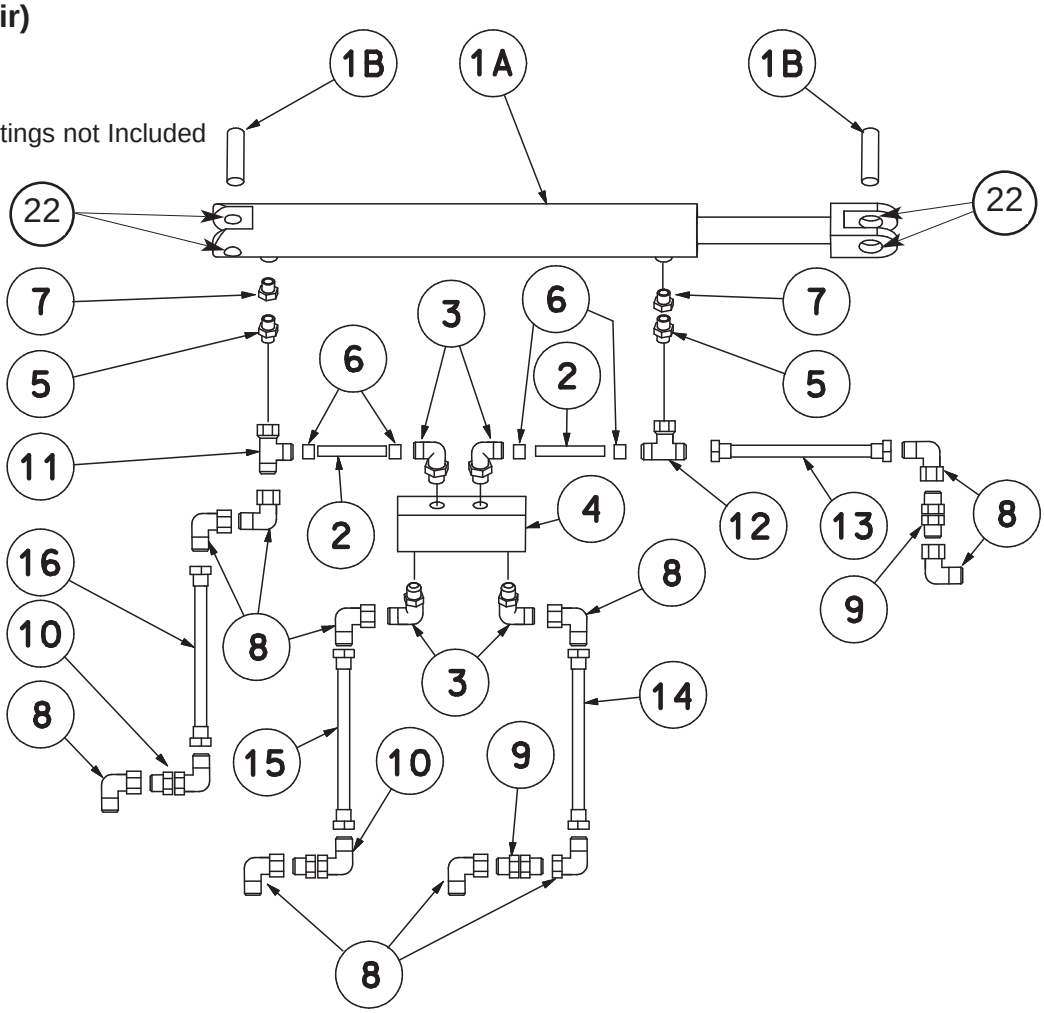


### Cylinder (Latch)

PS-62997-A

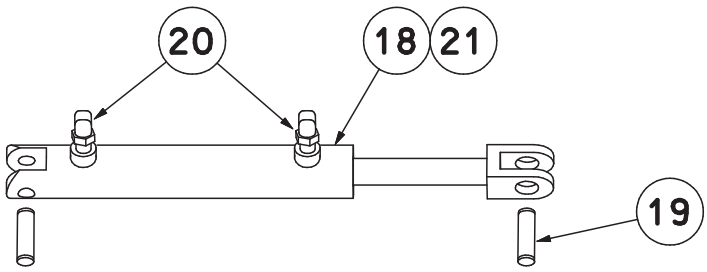

# FOLDING STAIRWAY
## Komatsu PC3000 Excavator

## Section 4-7 Hydraulic Cylinder Assembly

| Item | Part No. | Part Name | Qty | | |
|---|---|---|---|---|---|
| - | PS-63019-AH | CYLINDER ASSEMBLY(incl.hard plumbing) | 1 | | |
| 1A | PS-63019-A | HYDRAULIC CYLINDER 4” | 1 | | |
| 1B | PS-63019-P | PIN - CYLINDER | 2 | | |
| 1C | PS-63019-HPK | HARD PLUMBING KIT | 1 | | |
| 2 | PS-61160-60MM | TUBING | 2 | | |
| 3 | PS-61167 | FITTING ELBOW | 4 | | |
| 4 | PS-0844070-30220A | VALVE ASSEMBLY | 1 | | |
| 5 | PS-61157 | FITTING STRAIGHT | 2 | | |
| 6 | PS-61147 | FERRULES (Nut & Sleeve) | 4 | | |
| 7 | PS-61163 | FITTING - REDUCER | 2 | | |
| 8 | PS-61159 | SWIVEL ELBOW | 10 | | |
| 9 | PS-61177 | 9/16” BULKHEAD FITTING STRAIGHT | 2 | | |
| 10 | PS-61185 | 9/16” BULKHEAD FITTING ELBOW | 2 | | |
| 11 | PS-61183 | TEE FITTING (CYL END) | 1 | | |
| 12 | PS-61166 | TEE FITTING (ROD END) | 1 | | |
| 13 | PS-60051-200MM | HYDRAULIC HOSE 200MM | 1 | | |
| 14 | PS-60051-280MM | HYDRAULIC HOSE 280MM | 1 | | |
| 15 | PS-60051-320MM | HYDRAULIC HOSE 320MM | 1 | | |
| 16 | PS-60051-370MM | HYDRAULIC HOSE 370MM | 1 | | |
| 17 | PS-63019-SK | SEAL KIT (not shown) | 1 | | |
| - | - | - | - | | |
| 18 | PS-62997-A | HYDRAULIC CYLINDER-LATCH | 1 | | |
| 19 | PS-62997-P | PIN | 2 | | |
| 20 | PS-61152 | FITTING 90DEG | 2 | | |
| 21 | PS-62997-SK | SEAL KIT (not shown) | 1 | | |
| 22 | PS-63009-C | HARDENED BUSH | 4 | | |

# FOLDING STAIRWAY
## Komatsu PC3000 Excavator

## Section 4-7 Hydraulic Valve Diagram

**LIFT CYLINDER**
**PS-63019-A**

**LOCK CYLINDER**
**PS-62997-A**

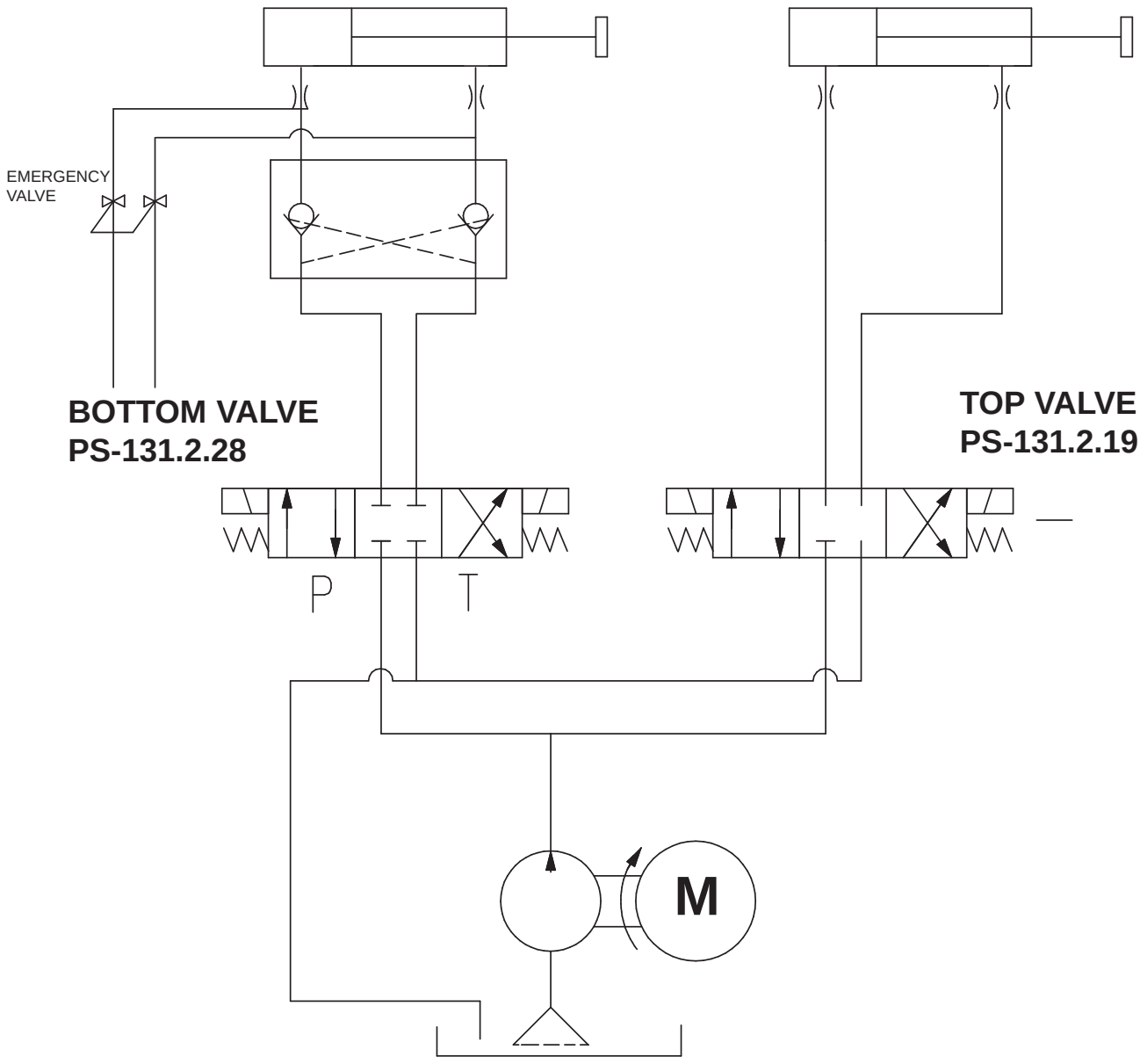


**PS-80105-PA-LFS**

# FOLDING STAIRWAY
## Komatsu PC3000 Excavator

## Section 4-7 Hydraulic Valve - Emergency

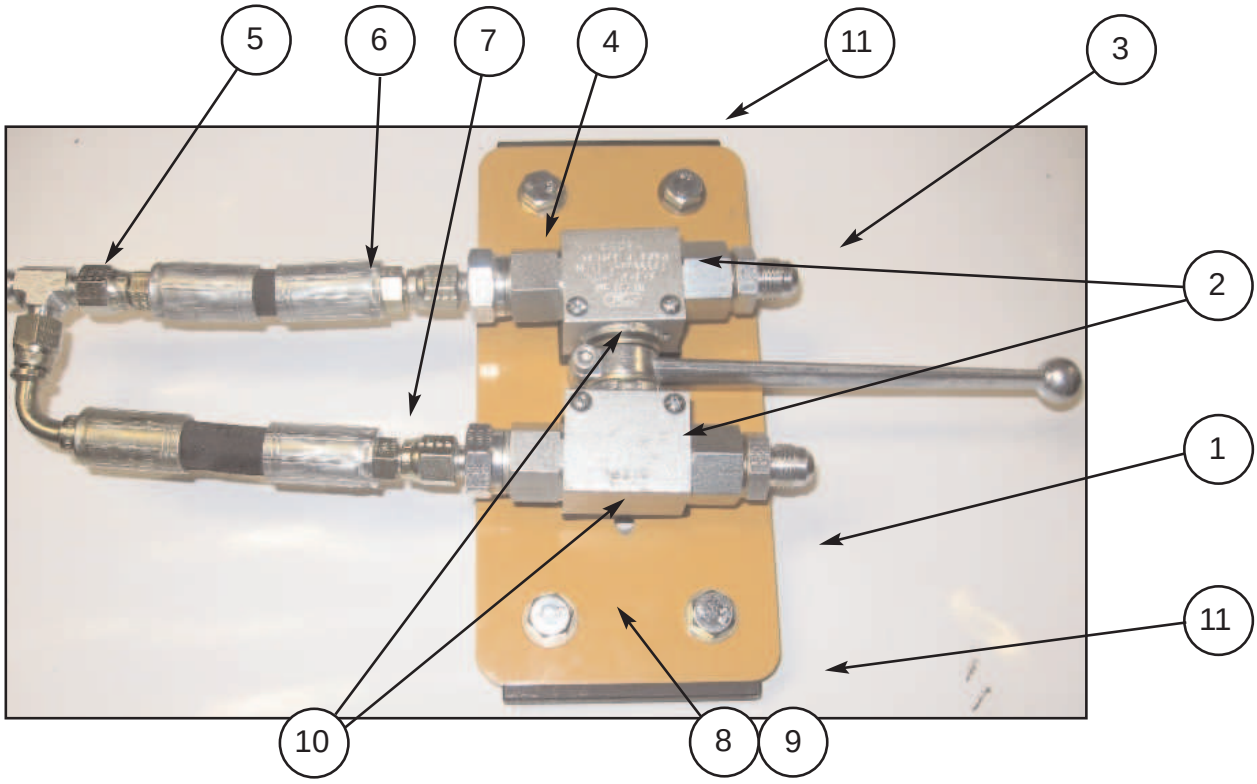


| Item | Part No. | Part Name | Qty | | |
|---|---|---|---|---|---|
| 1 | PS-73013-HEV | HYDRAULIC EMERGENCY VALVE PLATE | 1 | | |
| 2 | PS-63203 | 1/4”BALL VALVE | 2 | | |
| 3 | PS-61157 | FITTING-STRAIGHT | 2 | | |
| 4 | PS-61153 | FITTING | 2 | | |
| 5 | PS-61140 | FITTING-TEE-7/16” JIC | 1 | | |
| 6 | PS-60050-130MM | Hyd. Hose-130mm (2x7/16” JIC STRAIGHT) | 1 | | |
| 7 | PS-60050-145MM | Hyd. Hose-145mm (1x7/16”JIC Str. & 1x7/16”JIC Elbow) | 1 | | |
| 8 | CPS-M8X20ZP | BOLT-M8 x 20 | 4 | | |
| 9 | CPS-M8WH | FLAT WASHER-M8 | 4 | | |
| 10 | PS-63203-MTG-BL | VALVE MOUNTING BLOCKS | 2 | | |
| 11 | PS-63203-BLK | MOUNTING BLOCKS FOR PLATE ASSEMBLY | 2 | | |

# FOLDING STAIRWAY
## Komatsu PC3000 Excavator

## Section 4-8 Power Pack
See Parts list Page 35

**PS-80107-PA (No cradle)**
**PS-80107-PA-LFS (Inc. cradle)**

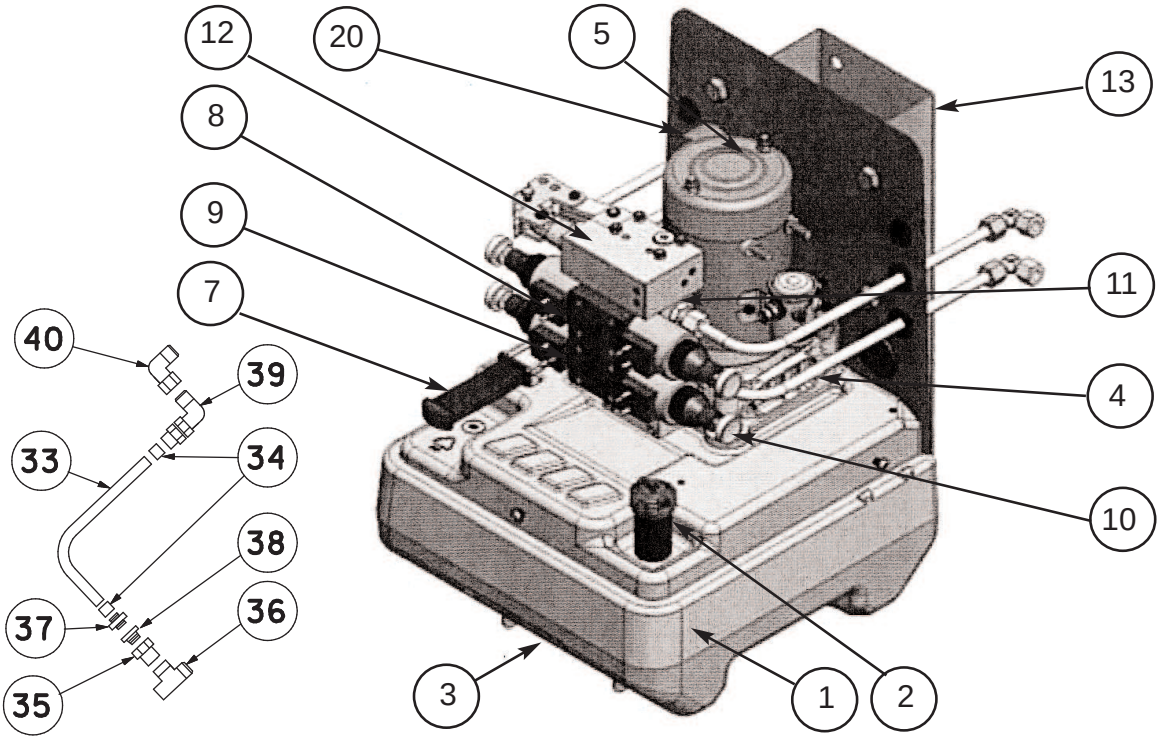


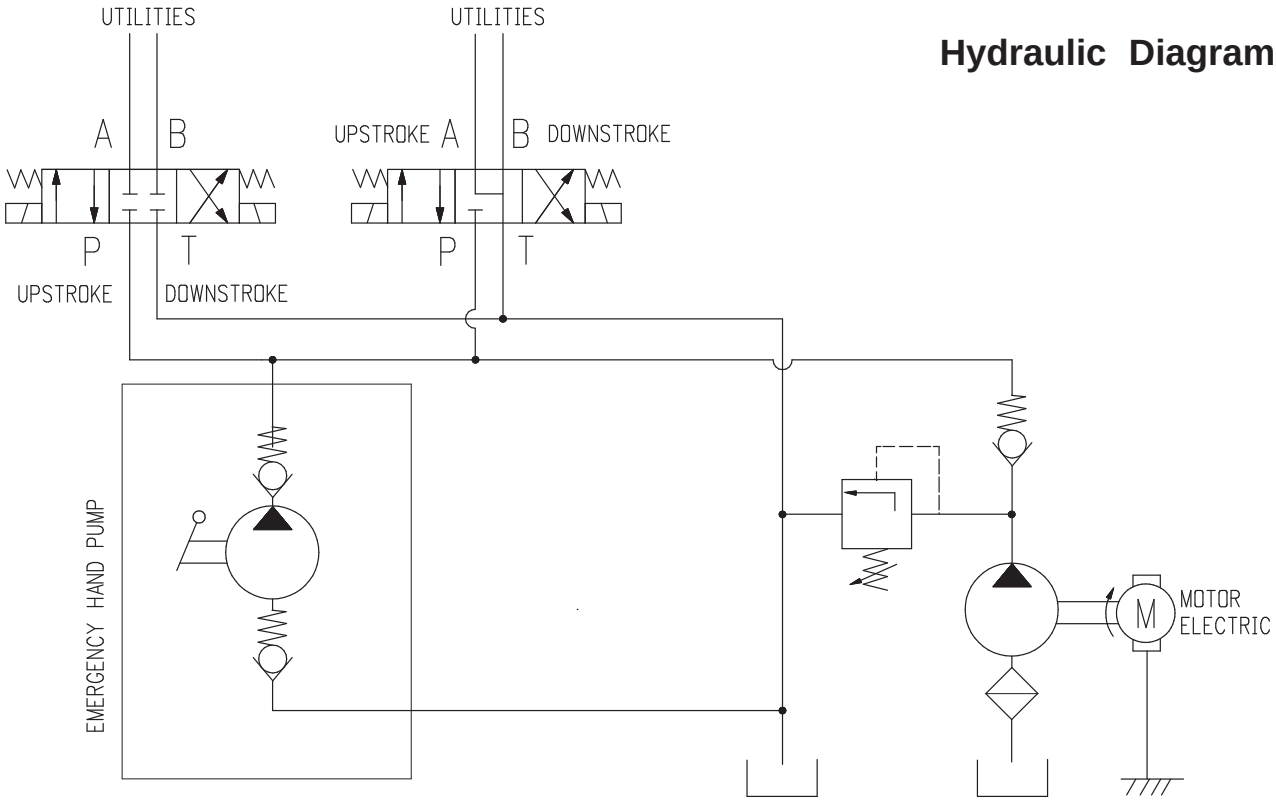


**Hydraulic Diagram**

**NOTE.**
**THE RELIEF PRESSURE OF THE POWERPACK IS TO BE SET TO 2800 PSI.**
**IF THE POWERPACK IS REPLACED,THIS RELIEF PRESSURE WILL NEED TO BE RESET USING INLINE GAUGES.**
**FAILURE TO DO SO MAY RESULT IN ACCIDENT OR INJURY**

# FOLDING STAIRWAY
## Komatsu PC3000 Excavator

**Section 4-8** **Power Pack**
See Parts list Page 35

**PS-80107-PA (No cradle)**
**PS-80107-PA-LFS (Inc. cradle)**

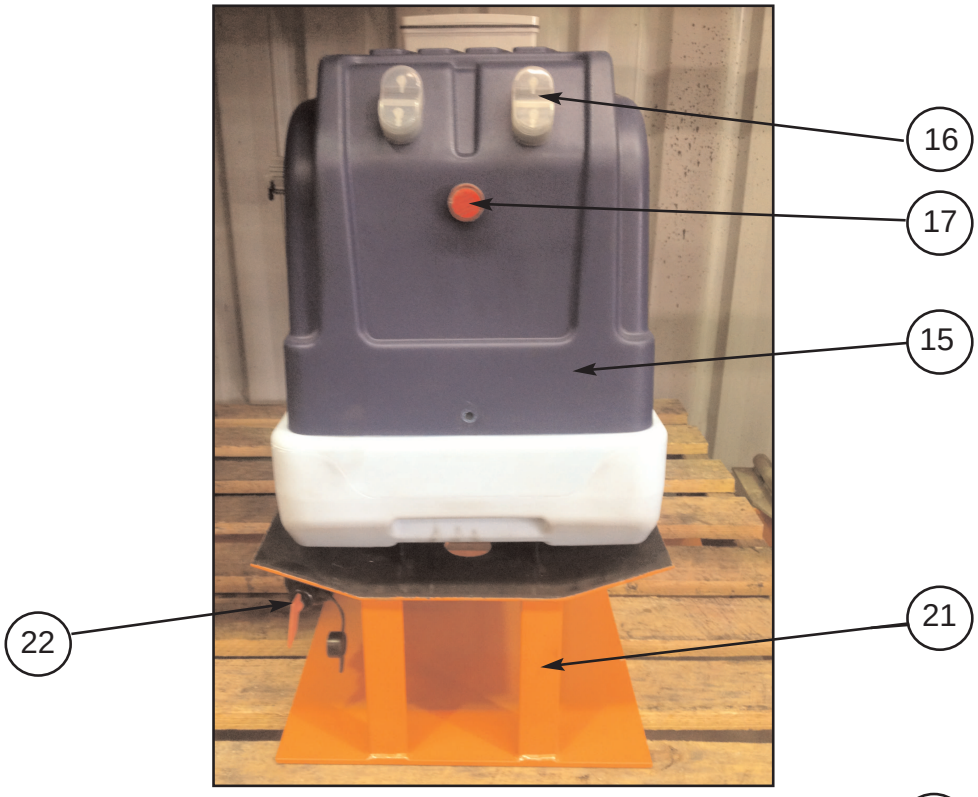


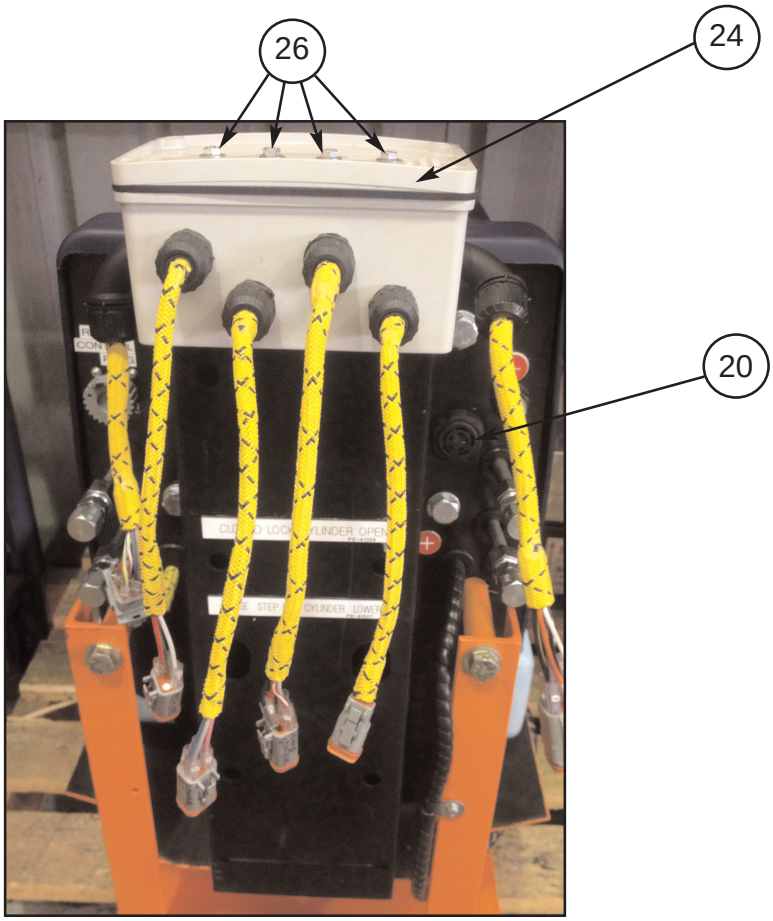

# FOLDING STAIRWAY
## Komatsu PC3000 Excavator

## Section 4-8 Power Pack Assembly PS-80107-PA-LFS
**Assembly complete** See Photos Pages 33 & 34

| Item | Part No. | Part Name | Qty | | |
|---|---|---|---|---|---|
| 1 | PS-514-9-154 | PLASTIC TANK | 1 | | |
| 2 | PS-509-5-140 | TANK FILLER CAP/ BREATHER | 1 | | |
| 3 | PS-115-6-126 | TANK PLUG | 1 | | |
| 4 | PS-147-900-724 | PUMP & HOUSING ASSEMBLY | 1 | | |
| 5 | PS-149-165-89 | 24V MOTOR | 1 | | |
| 6 | PS-114-4-951 | DRIVE COUPLING | 1 | | Not shown |
| 7 | PS-106-936-308 | EMERGENCY HAND PUMP | 1 | | |
| 8 | PS-131-2-19 | CLOSED CENTRE (A1) VALVE-TOP | 1 | | |
| 9 | PS-131-2-28 | A-B TO T (A2) VALVE-BOTTOM | 1 | | |
| 10 | PS-122-11-1258 | MANUAL OVERRIDE BUTTON | 4 | | |
| 11 | PS-149-115-123 | BASE PANEL (Manifold) | 1 | | |
| 12 | PS-149-115-70 | INTERMEDIATE PANEL (Manifold) | 1 | | |
| 13 | PS-538-6-200 | REAR BRACKET | 1 | | |
| 14 | PS-118-64 | PUMP FILTER | 1 | | Not shown |
| 15 | PS-147-790-406 | DOUBLE VALVE COVER | 1 | | |
| 16 | PS-122-11-1276 | COVER SWITCH | 2 | | |
| 17 | PS-149-990-991 | COVER LIGHT | 1 | | |
| 18 | PS-541-3-126 | PUMP PICK UP TUBE | 1 | | Not shown |
| 19 | PS-541-6-89 | RELIEF TUBE | 1 | | Not shown |
| 20 | PS-122-11-357 | BUZZER | 1 | | |
| 21 | PS-21613 | MOUNTING CRADLE | 1 | | |
| 22 | PS-149-120-820 | MASTER SWITCH | 1 | | |
| 23 | PS-506-4-254 | O RING SEAL 5.34 X 101 | 1 | | (on pump)Not shown |
| 24 | PS-265/4 | ELECTRICAL BOX | 1 | | |
| 25 | PS-1712080 | BLACK JUNCTION BOX | 1 | | Inside - Not shown |
| 26 | PS-84214 | RECTIFIERS | 4 | | |
| 27 | PS-77013 | MOTOR ENCLOSURE HARNESS | 1 | | Inside Power Pack |
| 28 | PS-77015 | ELECTRICAL BOX HARNESS | 1Set | | (6 Small Harnesses) |
| 29 | PS-63202A | FLOW CONTROL VALVES | 2 | | Not shown |
| 30 | PS-60051-3.5 | HYD HOSES 3.5M X 9/16 | 2 | | Not shown |
| 31 | PS-60051-2.8 | PS-60051- 2.8M X 9/16 | 2 | | Not shown |
| 32 | PS-60051-1.8 | PS-60051-1.8M X 9/16 | 2 | | Not shown |
| 33 | PS-61160-K3000 | 450mm HYD. TUBE | 1 | | |
| 34 | PS-61147 | FERRELS | 2 | | |
| 35 | PS-61196 | REDUCER FITTING(524-1608) 1”x 3/8” | 1 | | |
| 36 | PS-61195 | TEE FITTING (548-161616) | 1 | | |
| 37 | PS-61157 | 9/16” NIPPLE M/M | 1 | | |
| 38 | PS-50008 | BRASS REDUCER 3/8” x 1/4” | 1 | | |
| 39 | PS-61185 | ELBOW BULKHEAD | 1 | | |
| 41 | PS-61159 | SWIVEL ELBOW | 1 | | |

# FOLDING STAIRWAY
## Komatsu PC3000 Excavator

## Section 4-9 Electrical Controls
Proximity Switch and Control Pendant

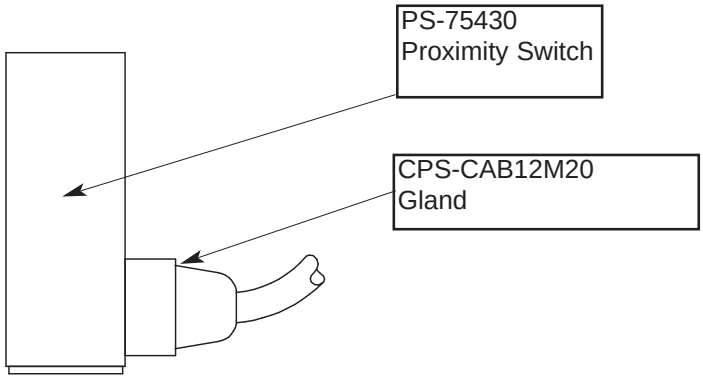


**Control Pendant Switch**
Mounted on Handrail

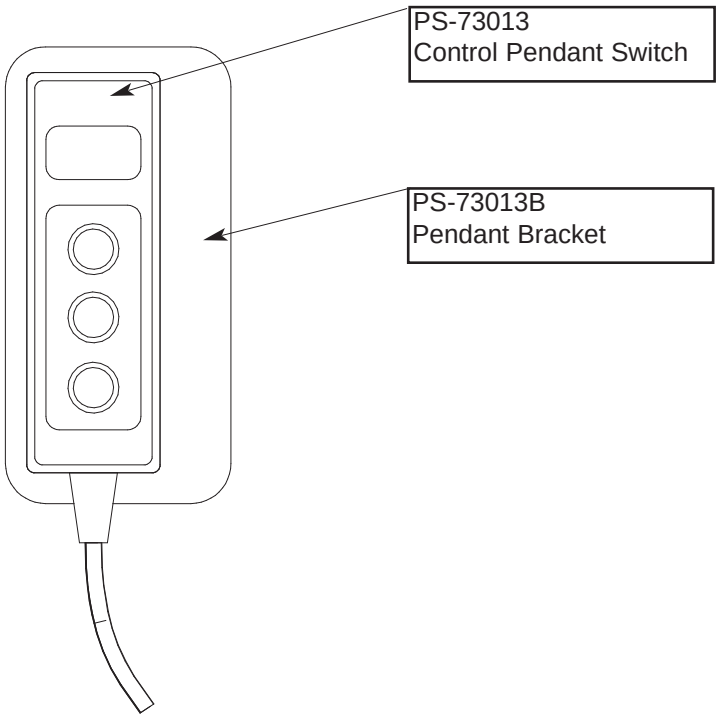

# FOLDING STAIRWAY
## Komatsu PC3000 Excavator

## Section 4-9 Electrical Controls Wiring 1

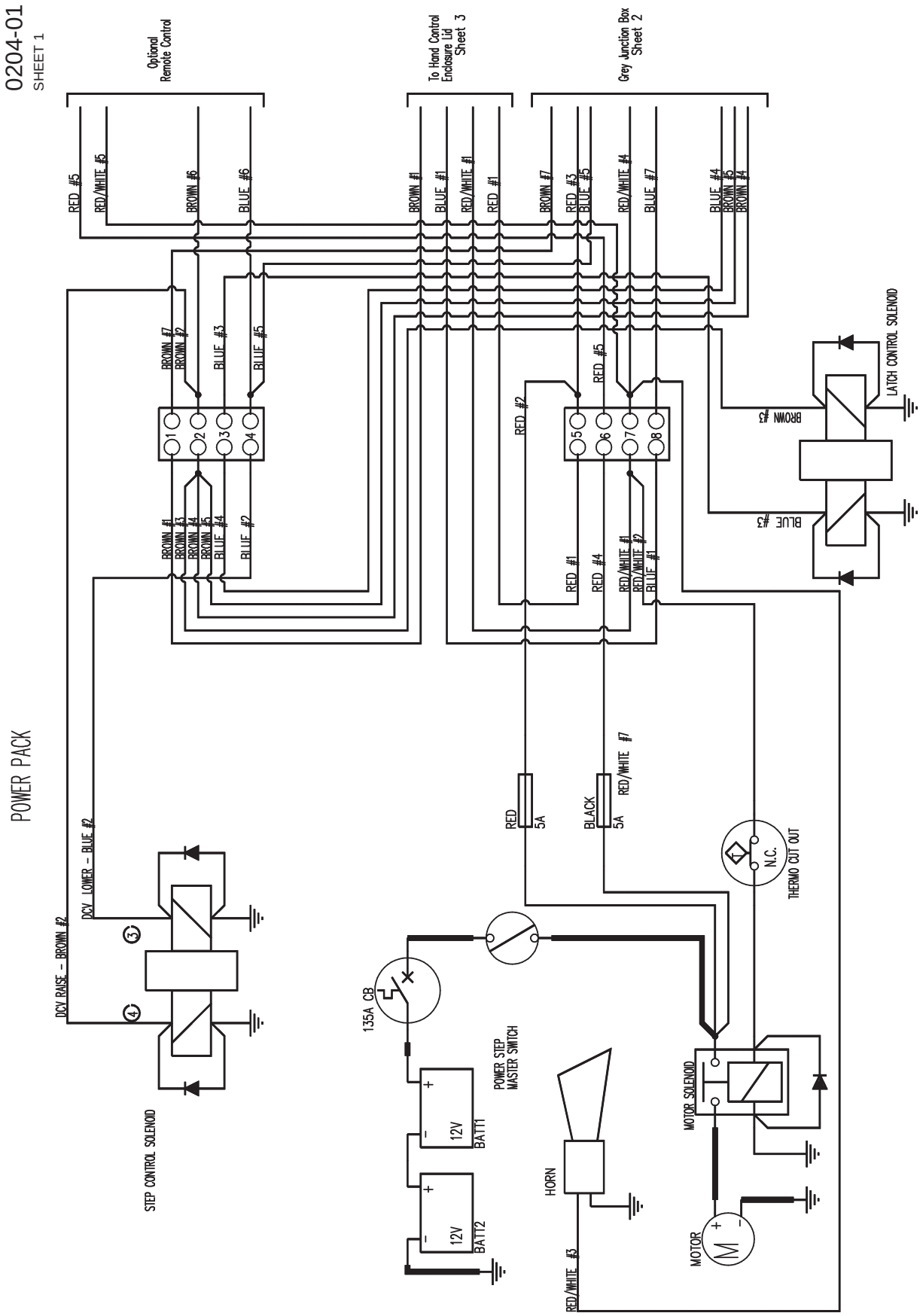

# FOLDING STAIRWAY
## Komatsu PC3000 Excavator

## Section 4-9 Electrical Controls Wiring 2

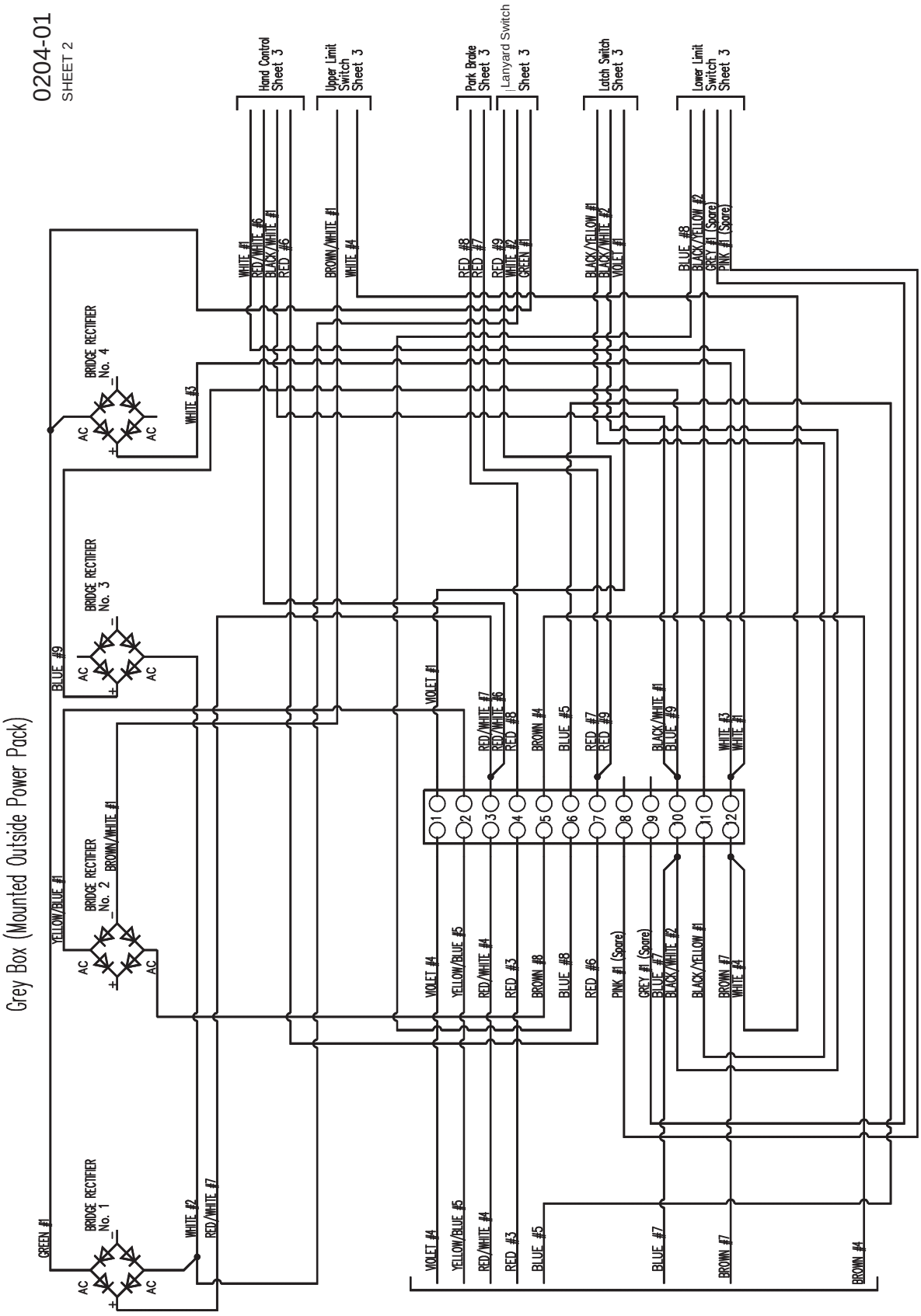

# FOLDING STAIRWAY
## Komatsu PC3000 Excavator

## Section 4-9 Electrical Controls Wiring 3

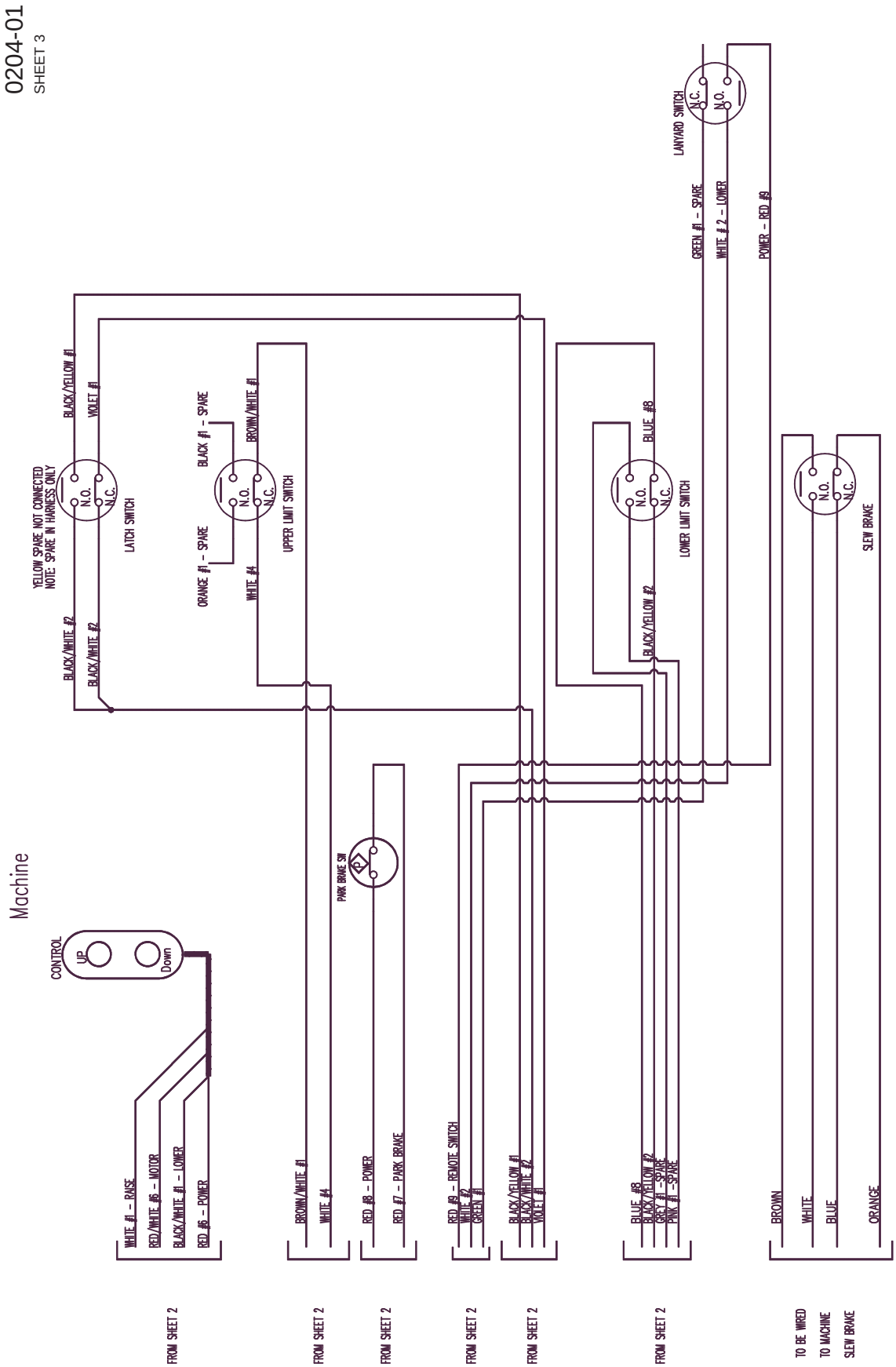

0204-01
SHEET 4

## 1. PS-77026 Lock Harness and Stair Up Harness To Go Switch

No. 2 BLACK/WHITE (LATCH SWITCH) (N.O. Looped to N.C. Contact)
No. 1 VIOLET (LATCH SWITCH) (N.C. Contact)
No. 1 BLACK/YELLOW (LATCH SWITCH) (N.O. Contact)
No. 1 YELLOW - SPARE (LATCH SWITCH) (Not Connected)
No. 1 BROWN/WHITE (UPPER LIMIT SWITCH) (N.C. Contact)
No. 4 WHITE (UPPER LIMIT SWITCH) (N.C. Contact)
No. 1 BLACK - SPARE (UPPER LIMIT SWITCH) (N.O. Contact)
No. 1 ORANGE - SPARE (UPPER LIMIT SWITCH) (N.O. Contact)

10 m

LATCH SWITCH
Go Switch

UPPER LIMIT SWITCH
Go Switch

ENCLOSURE

## 2. PS-77027 Lower Limit Switch Harness

No. 2 BLACK/YELLOW (N.C. Contact)
No. 3 BLUE (N.C. Contact)
No. 1 GREY - SPARE (N.O. Contact)
No. 1 PINK - SPARE (N.O. Contact)

7 m

## 3. PS-77028 Hand Control Platform Harness (Mounted on Handrail)

No. 1 WHITE
No. 1 BLACK/WHITE
No. 6 RED
No. 6 RED/WHITE

10 m

## 4. PS-77029 Lanyard Switch Harness

No. 2 WHITE
No. 9 RED
No. 1 GREEN

10 m

## 5. PS-77006 Park Brake SLRW

2 X RED WIRES AT 10 METRES
No. 7 RED - CONNECTION 7
No. 8 RED - CONNECTION 4

10 m

## 6. PS-77009-AR Slew Brake Limit Switch

BLUE N.C.
BROWN N.O.
WHITE N.C.
WHITE N.O.

10 m

## Grey Junction Box (Mounted Outside Power Pack)

0204-01
SHEET 5

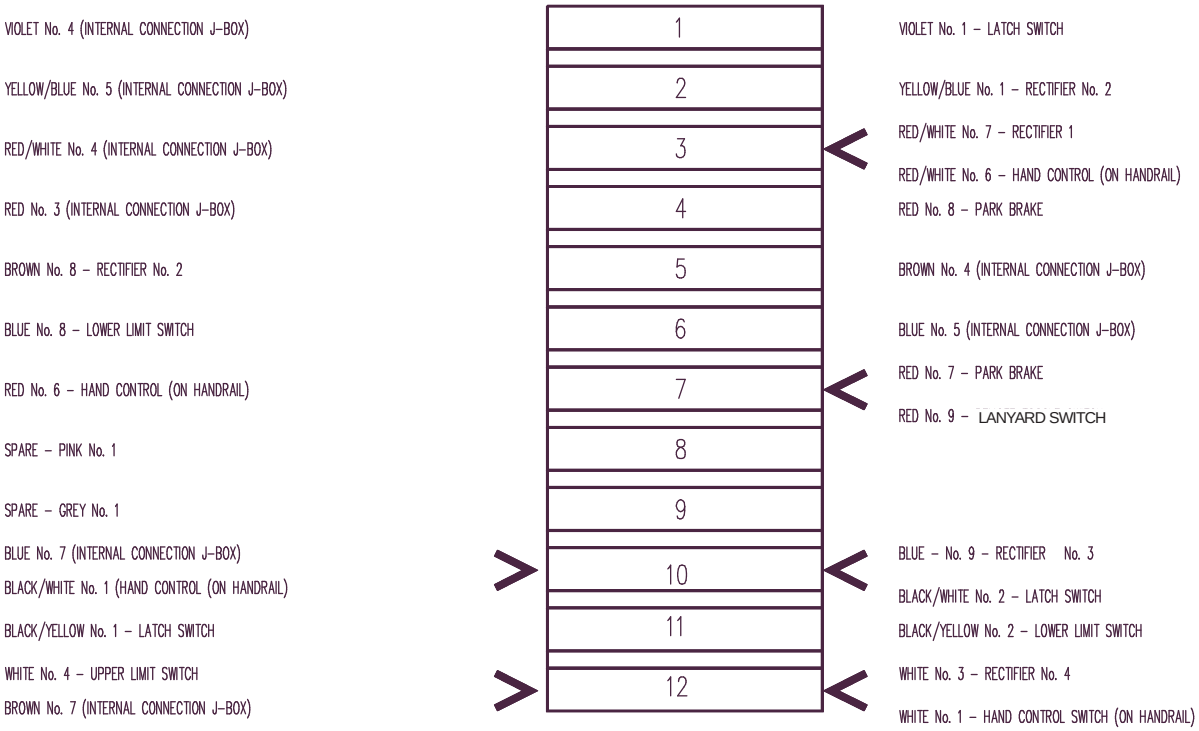


## Black Junction Box (Inside Power Pack)

0204-01
SHEET 6

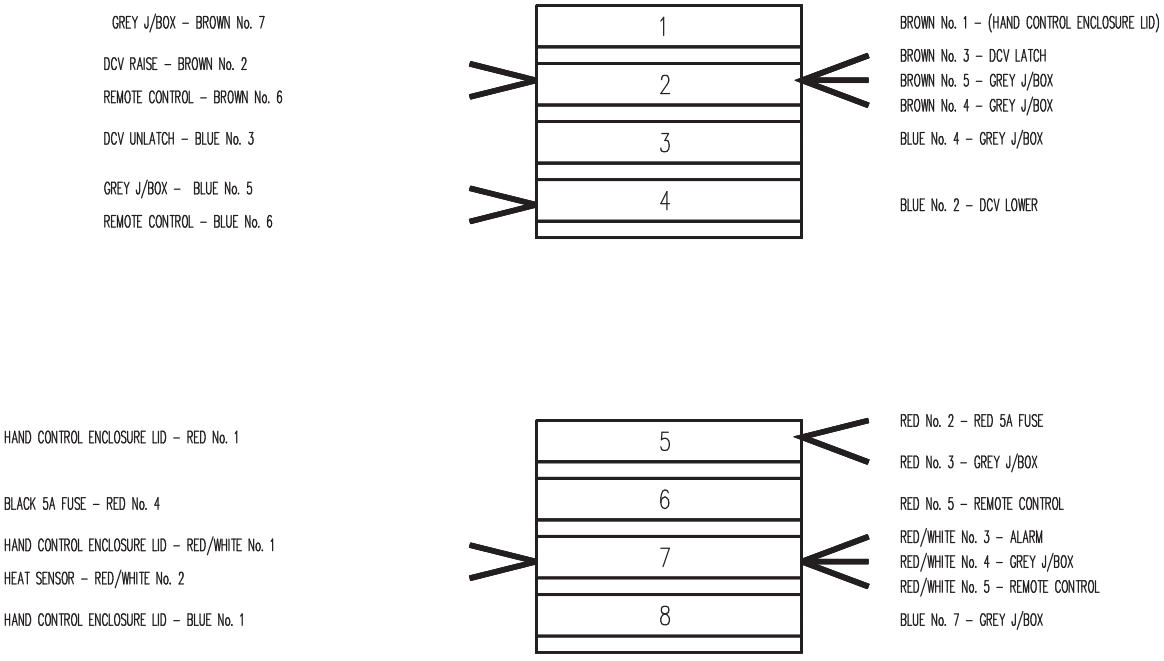

# WHITE JUNCTION BOX BRIDGE RECTIFIERS (MOUNTED ON LID)
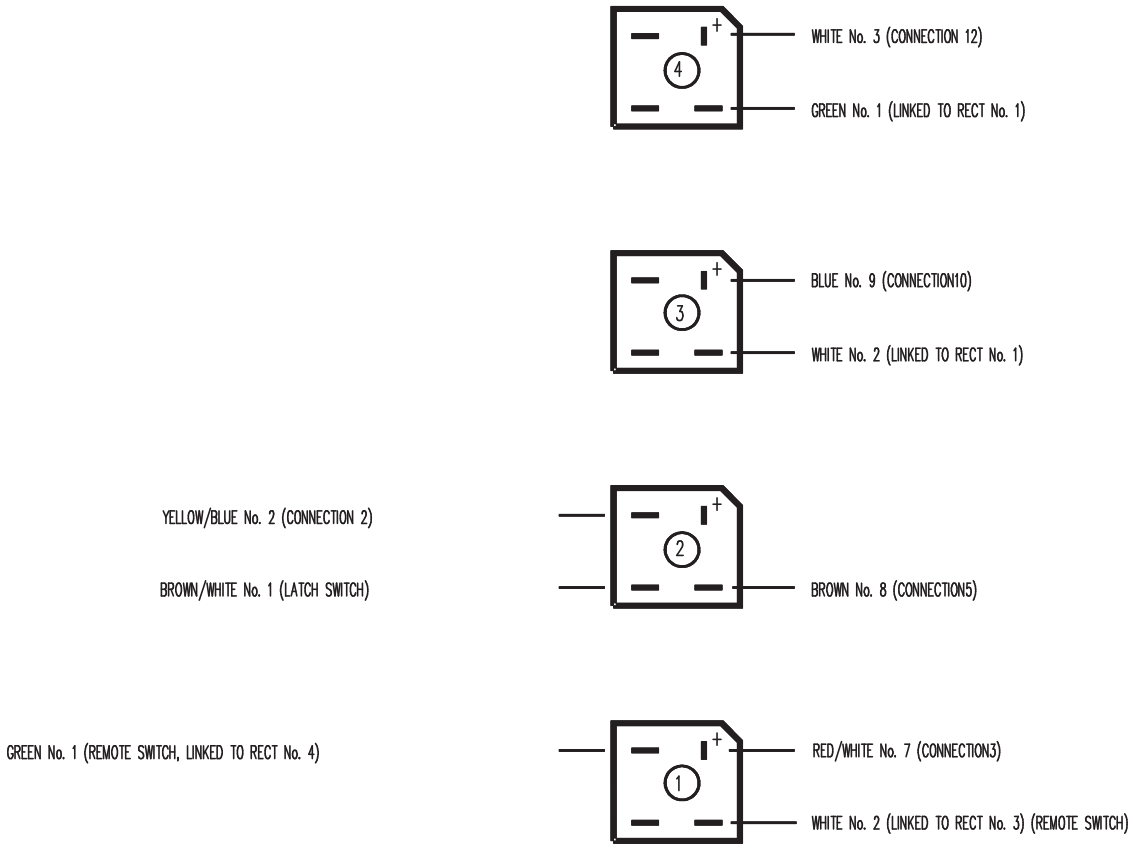
0204-01
SHEET 7